TI01302F/00/EN/07.20
71496290
2020-09-25

Technical Information
Micropilot FMR60

Free space radar

Level measurement in liquids

Application

- Continuous, non-contact level measurement of liquids, pastes and sludges
- PTFE drip-off antenna
- Maximum measuring range: 50 m (164 ft)
- Temperature: −40 to +130 °C (−40 to +266 °F)
- Pressure: −1 to +16 bar (−14.5 to +232 psi)
- Accuracy: ± 1 mm (0.04 in)
- Linearity protocol (3-point, 5-point)

Your benefits

- Innovative drip-off antenna made of PTFE
- Reliable measurement thanks to improved focusing and small beam angle, particularly in vessels with many internal fittings
- Safety by design - ensures highest safety
- Easy, guided commissioning with intuitive user interface
- *Bluetooth*® wireless technology for commissioning, operation and maintenance via free iOS / Android app SmartBlue
- Maximum reliability thanks to multi-echo tracking
- HistoROM configuration memory makes for easier commissioning, maintenance and diagnostics
- SIL2 as per IEC 61508, SIL3 for homogeneous or diverse redundancy
- Easy proof testing for SIL and WHG
- RFID TAG - easy identification of measuring points for improved data access
- Heartbeat Technology

Endress+Hauser
People for Process Automation

Table of contents

Important document information

Document function

These Operating Instructions provide all of the information that is required in various phases of the life cycle of the device including:
- Product identification
- Incoming acceptance
- Storage
- Installation
- Connection
- Operation
- Commissioning
- Troubleshooting
- Maintenance
- Disposal

Symbols used

Safety symbols

DANGER
This symbol alerts you to a dangerous situation. Failure to avoid this situation will result in serious or fatal injury.

WARNING
This symbol alerts you to a dangerous situation. Failure to avoid this situation can result in serious or fatal injury.

CAUTION
This symbol alerts you to a dangerous situation. Failure to avoid this situation can result in minor or medium injury.

NOTICE
This symbol contains information on procedures and other facts which do not result in personal injury.

Electrical symbols

Direct current

Alternating current

Direct current and alternating current

Ground connection
A grounded terminal which, as far as the operator is concerned, is grounded via a grounding system.

Protective earth (PE)
Ground terminals that must be connected to ground prior to establishing any other connections.
The ground terminals are located on the inside and outside of the device.
- Interior ground terminal; protective earth is connected to the mains supply.
- Exterior ground terminal; device is connected to the plant grounding system.

Symbols for certain types of information and graphics

Permitted
Procedures, processes or actions that are permitted

Preferred
Procedures, processes or actions that are preferred

Forbidden
Procedures, processes or actions that are forbidden

Tip
Indicates additional information

Reference to graphic

▶
Notice or individual step to be observed

1., 2., 3.
Series of steps

↳
Result of a step

1, 2, 3, ...
Item numbers

A, B, C, ...
Views

Hazardous area
Indicates the hazardous area

Safe area (non-hazardous area)
Indicates the non-hazardous area

Terms and abbreviations

BA
Document type "Operating Instructions"

KA
Document type "Brief Operating Instructions"

SD
Document type "Special Documentation"

XA
Document type "Safety Instructions"

PN
Nominal pressure

FieldCare
Scalable software tool for device configuration and integrated plant asset management solutions

DeviceCare
Universal configuration software for Endress+Hauser HART, PROFIBUS, FOUNDATION Fieldbus and Ethernet field devices

DTM
Device Type Manager

DD
Device Description for HART communication protocol

ε_r (Dk value)
Relative dielectric constant

PLC
Programmable logic controller (PLC)

CDI
Common Data Interface

Operating tool

The term "operating tool" is used in place of the following operating software:
- FieldCare / DeviceCare, for operation via HART communication and PC
- SmartBlue (app), for operation using an Android or iOS smartphone or tablet

Registered trademarks

HART®
Registered trademark of the FieldComm Group, Austin, Texas, USA

PROFIBUS®
Registered trademark of the PROFIBUS User Organization, Karlsruhe, Germany

FOUNDATION™ Fieldbus
Registration-pending trademark of the FieldComm Group, Austin, Texas, USA

Bluetooth®
The *Bluetooth®* word mark and logos are registered trademarks owned by the Bluetooth SIG, Inc. and any use of such marks by Endress+Hauser is under license. Other trademarks and trade names are those of their respective owners.

Apple®
Apple, the Apple logo, iPhone, and iPod touch are trademarks of Apple Inc., registered in the U.S. and other countries. App Store is a service mark of Apple Inc.

Android®
Android, Google Play and the Google Play logo are trademarks of Google Inc.

KALREZ®, VITON®
Registered trademarks of DuPont Performance Elastomers L.L.C., Wilmington, DE USA

TRI-CLAMP®
Registered trademark of Ladish & Co., Inc., Kenosha, USA

Function and system design

Measuring principle

The Micropilot is a "downward-looking" measuring system, operating based on the frequency modulated continuous wave method (FMCW). The antenna emits an electromagnetic wave at a continuously varying frequency. This wave is reflected by the product and received again by the antenna.

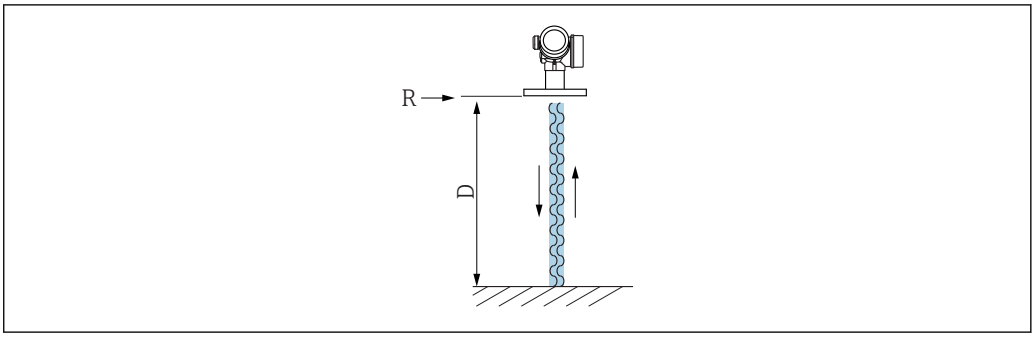

1 FMCW principle: transmission and reflection of the continuous wave

R Reference point of measurement
D Distance between reference point and product surface

The frequency of this wave is modulated in the form of a sawtooth signal between two limit frequencies f_1 and f_2:

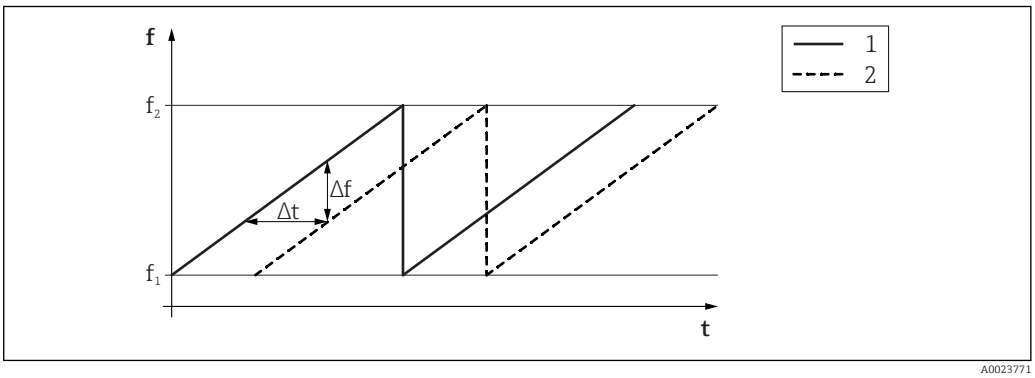

2 FMCW principle: result of frequency modulation

1 Transmitted signal
2 Received signal

This results in the following difference frequency at any time between the transmitted signal and the received signal:

$$\Delta f = k\,\Delta t$$

where Δt is the run time and k is the specified increase in frequency modulation.

Δt is given by the distance D between the reference point R and the product surface:

$$D = (c\,\Delta t)\ /\ 2$$

where c is the speed of propagation of the wave.

In summary, D can be calculated from the measured difference frequency Δf. D is then used to determine the content of the tank or silo.

Input

Measured variable

The measured variable is the distance between the reference point and the product surface. The level is calculated based on "E", the empty distance entered. Optionally, the level can be converted to other variables (volume, mass) by linearization (32 value pairs).

Measuring range

Maximum measuring range

FMR60

Antenna	Maximum measuring range
Drip-off, PTFE, 50 mm / 2"	50 m (164 ft)

Usable measuring range

The usable measuring range depends on the antenna size, the medium's reflective properties, the installation position and any possible interference reflections.

The media groups and the possible measuring range are described as a function of the application and media group in the following section. If the dielectric constant of the medium is not known, to ensure a reliable measurement assume the medium belongs to group B.

Media groups

Media group	ε_r	Example
A0	1.2 to 1.4	n-butane, liquid nitrogen, liquid hydrogen
A	1.4 to 1.9	Non-conductive liquids, e.g. liquefied gas
B	1.9 to 4	Non-conductive liquids, e.g. gasoline, oil, toluene, etc.
C	4 to 10	e.g. concentrated acid, organic solvents, ester, aniline, alcohol, etc.
D	> 10	Conductive liquids, aqueous solutions, diluted acids and bases

Measurement of the following media with absorbing gas phase
For example:
- Ammonia (pure - 100%)
- Acetone
- Methylene chloride
- Methyl ethyl ketone
- Propylene oxide
- VCM (vinyl chloride monomer)

To measure absorbing gases, either use a guided radar, measuring devices with another measuring frequency or another measuring principle.

If measurements must be performed in one of these media, please contact Endress+Hauser.

For dielectric constants (DC values) of many media commonly used in various industries refer to:
- the Endress+Hauser DC manual (CP01076F)
- the Endress+Hauser "DC Values App" (available for Android and iOS)

FMR60		
Storage vessel	**Buffer vessel**	**Vessel with agitator**
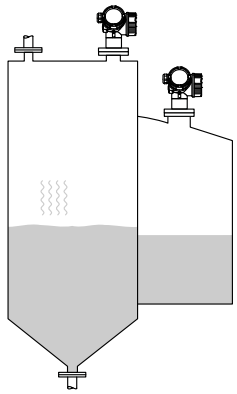 A0034565 Calm surface (e.g. bottom filling, filling via immersion tube or rare filling from above)	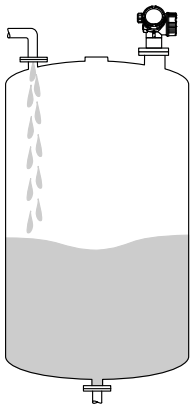 A0034566 Moving surface (e.g. continuous free filling from above, mixing jets)	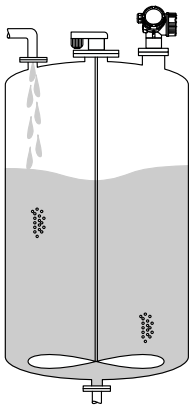 A0034567 Turbulent surface (e.g. filling from above, agitators, baffles etc.)
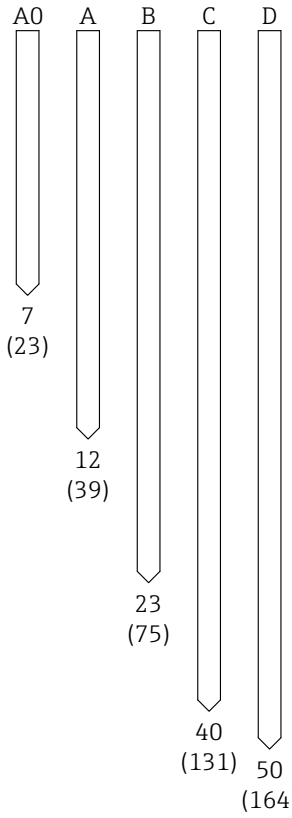 A0034574	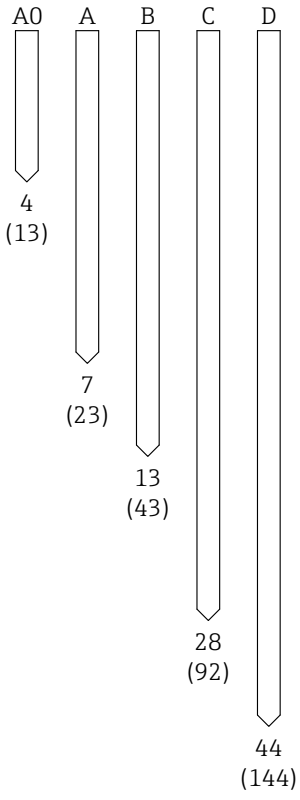 A0034579	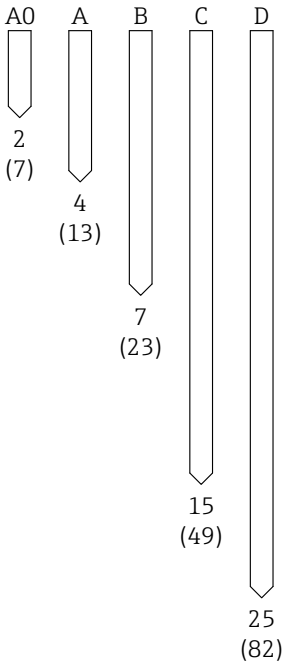 A0034584
Measuring range [m (ft)]		

Operating frequency	Approx. 80 GHz Up to 8 devices can be installed in a tank without the devices mutually influencing one another.
Transmission power	▪ Peak power: 6.3 mW ▪ Average output power: 63 µW

Output

Output signal

HART

- Signal coding:
  FSK ±0.5 mA over current signal
- Data transmission rate:
  1 200 Bit/s
- Galvanic isolation:
  Yes

Bluetooth® wireless technology

- Device version:
  Order code 610 "Accessory mounted", option NF "Bluetooth"
- Operation / configuration:
  Via the *SmartBlue* app
- Range under reference conditions:
  > 10 m (33 ft)
- Encryption:
  Encrypted communication and password encryption prevent incorrect operation by unauthorized persons

Switch output

For HART devices, the switch output is available as an option.

- Function:
  Open collector switch output
- Switching behavior:
  Binary (conductive or non-conductive), switches when the programmable switch-on point/switch-off point is reached
- Failure mode:
  Non-conductive
- Electrical connection data:
  U = 16 to 35 V_{DC}, I = 0 to 40 mA
- Internal resistor:
  R_I < 880 Ω
  The voltage drop at this internal resistor must be taken into account when planning the configuration. For example, the resulting voltage at a connected relay must be sufficient to switch the relay.
- Insulation voltages:
  Floating, insulation voltage 1 350 V_{DC} in relation to power supply and 500 V_{AC} ground
- Switch point:
  User-programmable, separate for switch-on point and switch-off point
- Switching delay:
  User-programmable in the 0 to 100 s range, separate for switch-on point and switch-off point
- Scan rate:
  Corresponds to the measuring cycle
- Signal source / device variables:
  - Level linearized
  - Distance
  - Terminal voltage
  - Electronic temperature
  - Relative echo amplitude
  - Diagnostic values, advanced diagnostic blocks
  - Only for active interface measurement
- Number of switch cycles:
  Unlimited

Signal on alarm

Depending on the interface, failure information is displayed as follows:
- Current output
  - Choice of failure mode (in accordance with NAMUR Recommendation NE 43):
    Minimum alarm: 3.6 mA
    Maximum alarm (= factory setting): 22 mA
  - Failure mode with user-configurable value: 3.59 to 22.5 mA
- Local display
  - Status signal (as per NAMUR Recommendation NE 107)
  - Plain text display
- Operating tool via HART communication or service interface (CDI)
  - Status signal (as per NAMUR Recommendation NE 107)
  - Plain text display

Linearization

The device's linearization function allows the user to convert the measured value to any length or volume units. Linearization tables for calculating the volume in cylindrical vessels are preprogrammed into the device. Other linearization tables of up to 32 value pairs can be entered manually or semi-automatically.

Galvanic isolation

All circuits for the outputs are galvanically isolated from each other.

Protocol-specific data

HART

Manufacturer ID	17 (0x11)
Device type ID	0x112B
HART specification	7.0
Device description files (DTM, DD)	Information and files under: ▪ www.endress.com ▪ www.fieldcommgroup.org
HART load	min. 250 Ω
HART device variables	The measured values can be freely assigned to the device variables. **Measured values for PV (primary variable)** ▪ Level linearized ▪ Distance ▪ Electronic temperature ▪ Relative echo amplitude ▪ Area of incoupling ▪ Analog output adv. diagnostics 1 ▪ Analog output adv. diagnostics 2 **Measured values for SV, TV, QV (second, third and fourth variable)** ▪ Level linearized ▪ Distance ▪ Electronic temperature ▪ Terminal voltage ▪ Relative echo amplitude ▪ Absolute echo amplitude ▪ Area of incoupling ▪ Analog output adv. diagnostics 1 ▪ Analog output adv. diagnostics 2
Supported functions	▪ Burst mode ▪ Additional transmitter status

Wireless HART data

Minimum starting voltage	17.5 V
Start-up current	4 mA
Starting time	80 s
Minimum operating voltage	17.5 V

Multidrop current	4.0 mA
Time for connection setup	30 s

Power supply

Terminal assignment

Terminal assignment 2-wire: 4-20 mA HART

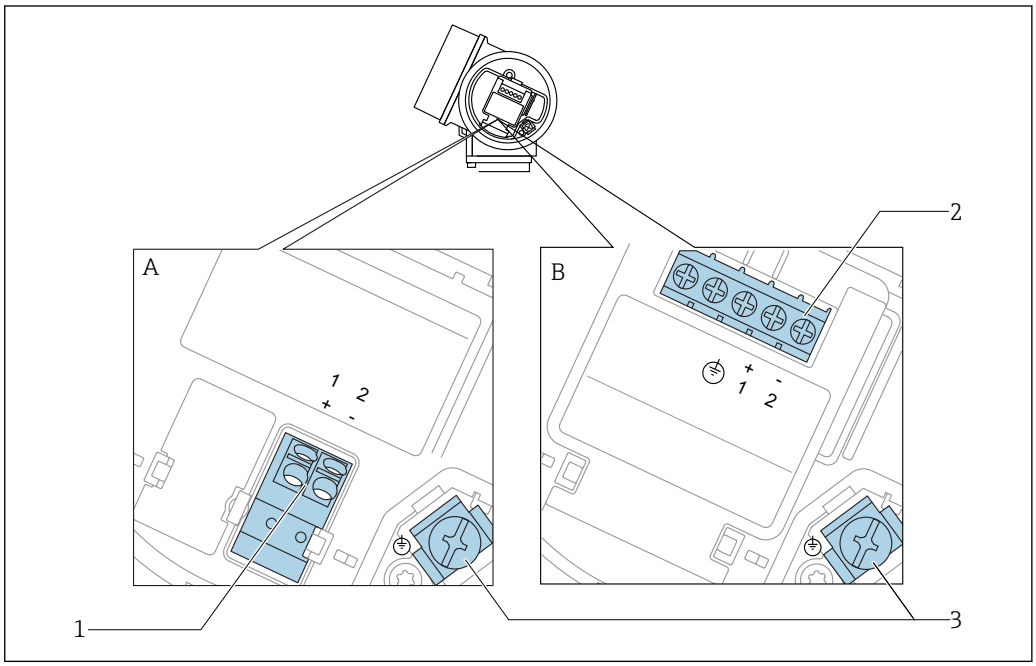

3 *Terminal assignment 2-wire: 4-20 mA HART*

A Without integrated overvoltage protection
B With integrated overvoltage protection
1 Connection 4-20 mA HART passive: terminals 1 and 2, without integrated overvoltage protection
2 Connection 4-20 mA HART passive: terminals 1 and 2, with integrated overvoltage protection
3 Terminal for cable screen

Block diagram 2-wire: 4-20 mA HART

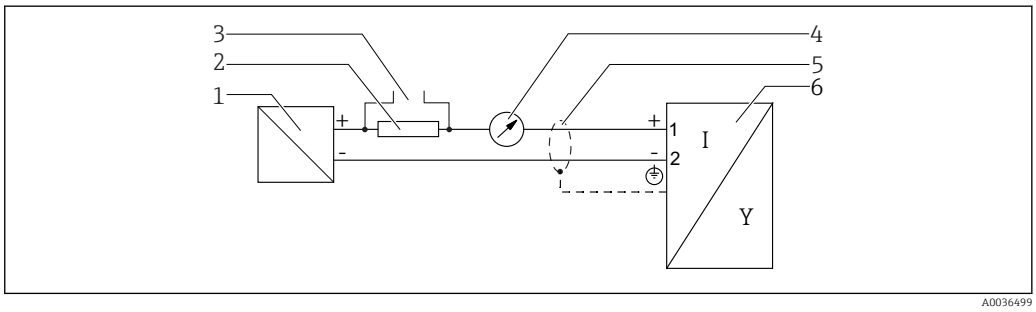

4 *Block diagram 2-wire: 4-20 mA HART*

1 Active barrier with power supply (e.g. RN221N); observe terminal voltage
2 HART communication resistor (≥ 250 Ω); observe maximum load
3 Connection for Commubox FXA195 or FieldXpert SFX350/SFX370 (via VIATOR Bluetooth modem)
4 Analog display device; observe maximum load
5 Cable screen; observe cable specification
6 Measuring device

Terminal assignment 2-wire: 4-20 mA HART, switch output

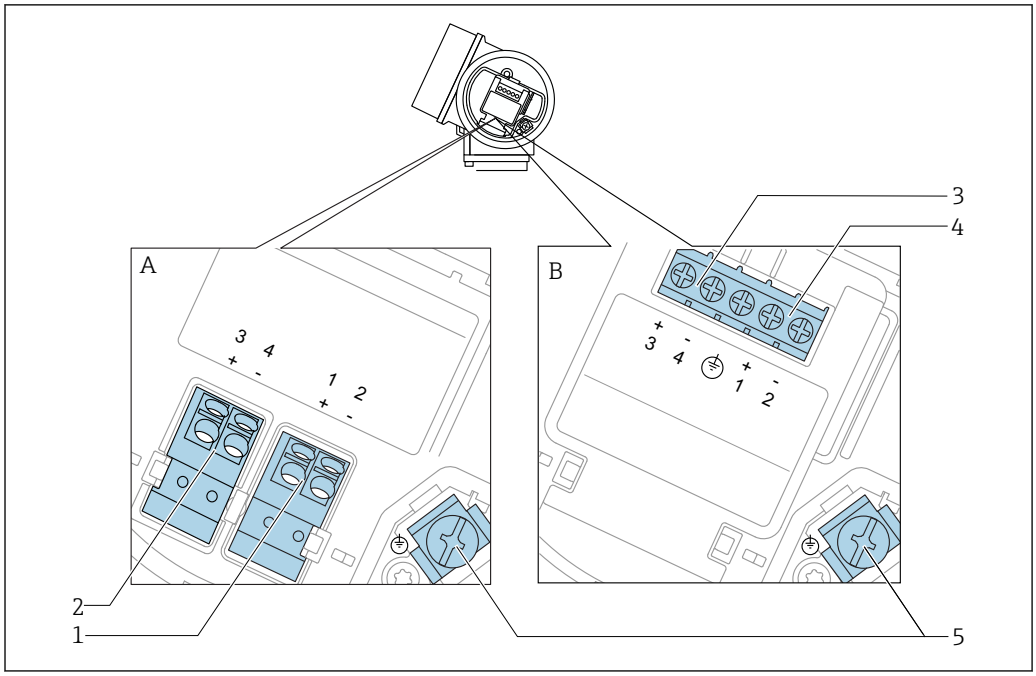

5 Terminal assignment 2-wire: 4-20 mA HART, switch output

A Without integrated overvoltage protection
B With integrated overvoltage protection
1 Connection 4-20 mA HART passive: terminals 1 and 2, without integrated overvoltage protection
2 Connection switch output (Open Collector): terminals 3 and 4, without integrated overvoltage protection
3 Connection switch output (Open Collector): terminals 3 and 4, with integrated overvoltage protection
4 Connection 4-20 mA HART passive: terminals 1 and 2, with integrated overvoltage protection
5 Terminal for cable screen

Block diagram 2-wire: 4-20 mA HART, switch output

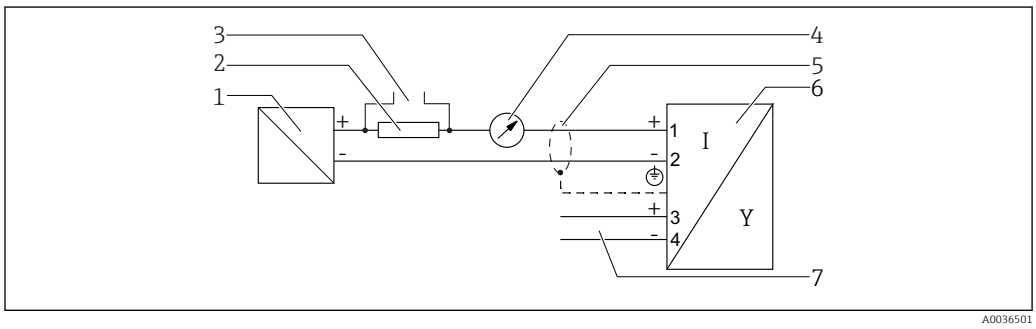

6 Block diagram 2-wire: 4-20 mA HART, switch output

1 Active barrier with power supply (e.g. RN221N); observe terminal voltage
2 HART communication resistor (≥ 250 Ω); observe maximum load
3 Connection for Commubox FXA195 or FieldXpert SFX350/SFX370 (via VIATOR Bluetooth modem)
4 Analog display device; observe maximum load
5 Cable screen; observe cable specification
6 Measuring device
7 Switch output (Open Collector)

Terminal assignment 2-wire: 4-20 mA HART, 4-20 mA

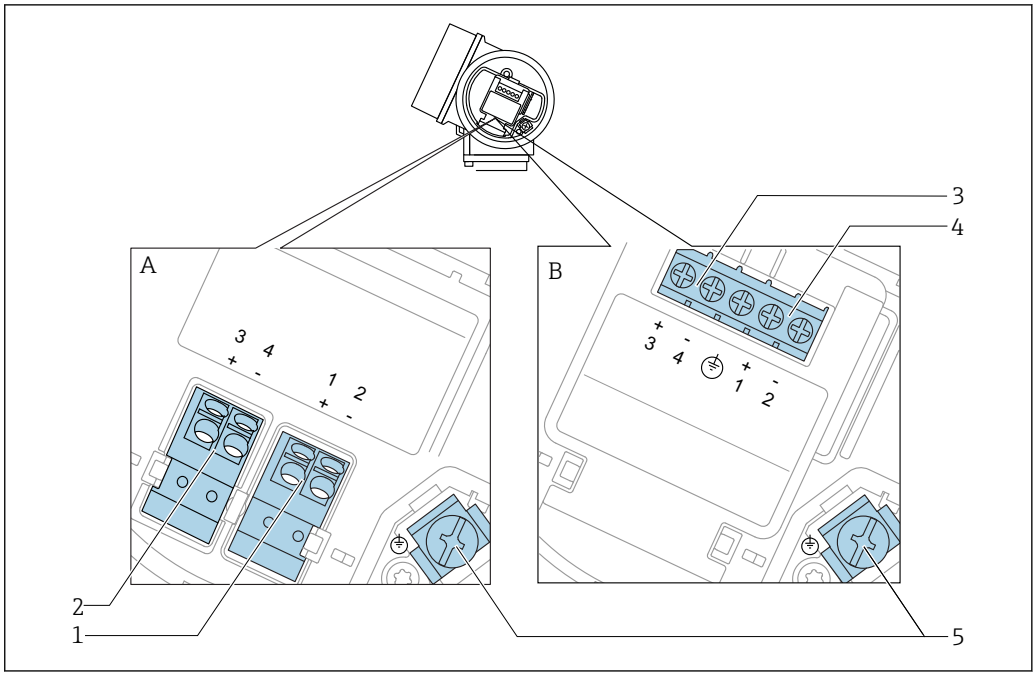

7 *Terminal assignment 2-wire: 4-20 mA HART, 4-20 mA*

A Without integrated overvoltage protection
B With integrated overvoltage protection
1 Connection current output 1, 4-20 mA HART passive: terminals 1 and 2, without integrated overvoltage protection
2 Connection current output 2, 4-20 mA: terminals 3 and 4, without integrated overvoltage protection
3 Connection current output 2, 4-20 mA: terminals 3 and 4, with integrated overvoltage protection
4 Connection current output 1, 4-20 mA HART passive: terminals 1 and 2, with integrated overvoltage protection
5 Terminal for cable screen

Block diagram 2-wire: 4-20 mA HART, 4-20 mA

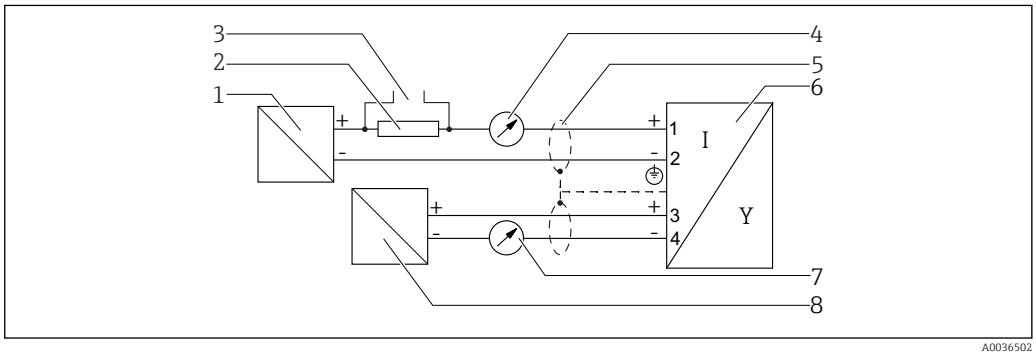

8 *Block diagram 2-wire: 4-20 mA HART, 4-20 mA*

1 Active barrier with power supply (e.g. RN221N); observe terminal voltage
2 HART communication resistor (≥ 250 Ω); observe maximum load
3 Connection for Commubox FXA195 or FieldXpert SFX350/SFX370 (via VIATOR Bluetooth modem)
4 Analog display device; observe maximum load
5 Cable screen; observe cable specification
6 Measuring device
7 Analog display device; observe maximum load
8 Active barrier with power supply (e.g. RN221N), current output 2; observe terminal voltage

Connection examples for the switch output

For HART devices, the switch output is available as an option.

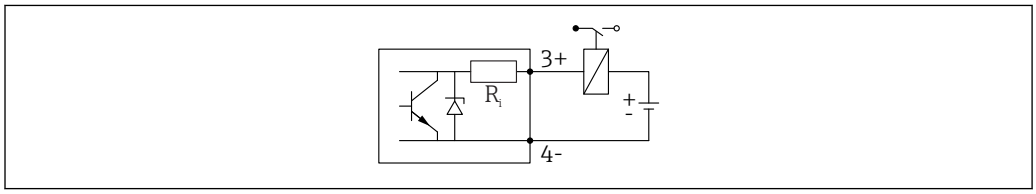

9 *Connection of a relay*

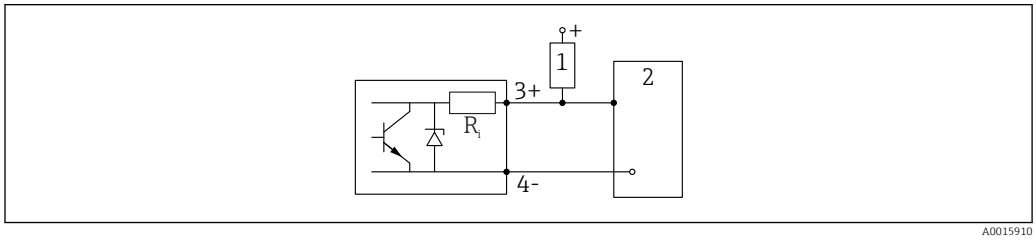

10 *Connection to a digital input*

1 *Pull-up resistor*
2 *Digital input*

For optimum interference immunity we recommend to connect an external resistor (internal resistance of the relay or pull-up resistor) of < 1 000 Ω.

Device plugs

In device versions with a device plug (M12 or 7/8"), it is not necessary to open the housing in order to connect the signal cable.

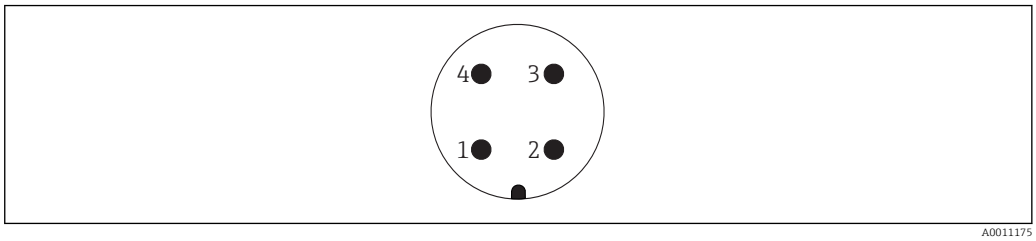

11 Pin assignment of M12 plug

1 Signal +
2 Not assigned
3 Signal –
4 Ground

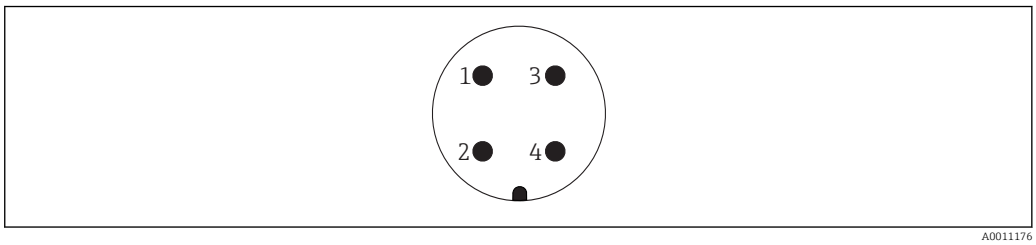

12 Pin assignment of 7/8" plug

1 Signal –
2 Signal +
3 Not assigned
4 Shielding

Supply voltage

An external power supply is necessary.

Various power supply units can be ordered as an accessory from Endress+Hauser.

2-wire, 4-20 mA HART, passive

"Power supply, output" [1]	"Approval" [2]	Terminal voltage U at device	Maximum load R, Depends on the supply voltage U_0 of power supply unit
A: 2-wire; 4-20 mA HART	▪ Non-Ex ▪ Ex ec ▪ Ex ic ▪ CSA GP	14 to 35 V [3]	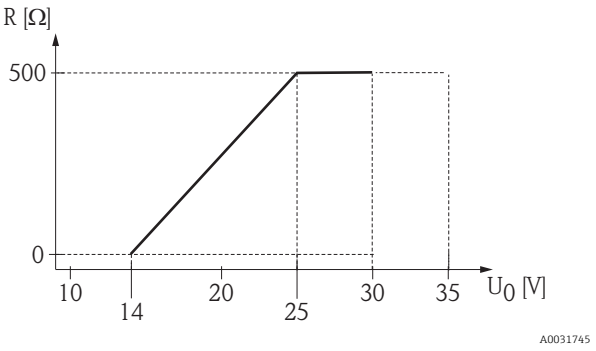
	Ex ia / IS	14 to 30 V [3]	
	▪ Ex db(ia) / XP ▪ Ex ic(ia) ▪ Ex ec(ia) ▪ Ex ta / DIP	14 to 35 V [3] [4]	
	Ex ia + Ex db(ia) / IS + XP	14 to 30 V [3]	

1) Feature 020 in the product structure
2) Feature 010 in the product structure
3) If the Bluetooth module is used, the minimum supply voltage increases by 2 V.
4) At ambient temperatures $T_a \leq -20$ °C, a terminal voltage U ≥ 16 V is required to start the device with the minimum failure current (3.6 mA).

"Power supply, output" [1]	"Approval" [2]	Terminal voltage U at device	Maximum load R, Depends on the supply voltage U_0 of power supply unit
B: 2-wire; 4-20 mA HART, switch output	▪ Non-Ex ▪ Ex ec ▪ Ex ec(ia) ▪ Ex ic ▪ Ex ic(ia) ▪ Ex db(ia) / XP ▪ Ex ta / DIP ▪ CSA GP	16 to 35 V [3]	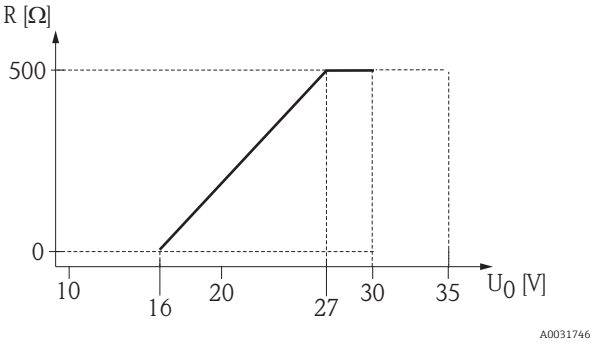
	▪ Ex ia / IS ▪ Ex ia + Ex d(ia) / IS + XP	16 to 30 V [3]	

1) Feature 020 in the product structure
2) Feature 010 in the product structure
3) If the Bluetooth module is used, the minimum supply voltage increases by 2 V.

"Power supply, output" [1]	"Approval" [2]	Terminal voltage U at device	Maximum load R, Depends on the supply voltage U_0 of power supply unit
C: 2-wire; 4-20 mA HART, 4-20 mA	All	16 to 30 V [3]	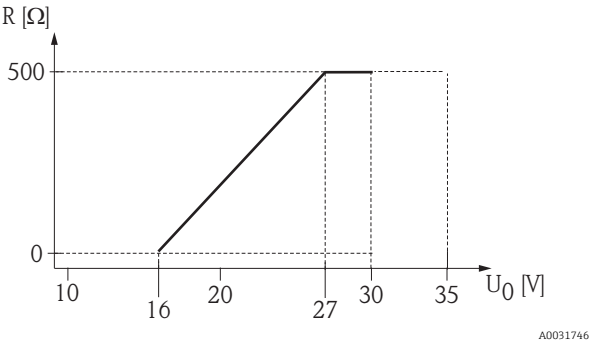

1) Feature 020 in the product structure
2) Feature 010 in the product structure
3) If the Bluetooth module is used, the minimum supply voltage increases by 2 V.

Integrated polarity reversal protection	Yes
Permitted residual ripple with f = 0 to 100 Hz	U_{SS} < 1 V
Permitted residual ripple with f = 100 to 10 000 Hz	U_{SS} < 10 mV

Power consumption

"Power supply; Output" [1]	Power consumption
A: 2-wire; 4-20mA HART	< 0.9 W
B: 2-wire; 4-20mA HART, switch output	< 0.9 W
C: 2-wire; 4-20mA HART, 4-20mA	< 2 x 0.7 W

1) Feature 020 of the product structure

Current consumption

HART	
Nominal current	3.6 to 22 mA the start-up current for multidrop mode can be parametrized (is set to 3.6 mA on delivery)
Breakdown signal (NAMUR NE43)	adjustable: 3.59 to 22.5 mA

Power supply failure

- Configuration is retained in the HistoROM (EEPROM).
- Error messages (incl. value of operated hours counter) are stored.

Potential equalization

No special measures for potential equalization are required.

If the device is designed for hazardous areas, observe the information in the documentation "Safety Instructions" (XA).

Cable entries

Connection of the power supply and signal cables

To be selected in feature 050 "Electrical connection":
- Coupling M20, material depends on approval:
  - For non-Ex, ATEX, IECEx, NEPSI Ex ia/ic:
    Plastic M20x1.5 for cable Ø5 to 10 mm (0.2 to 0.39 in)
  - For Dust-Ex, FM IS, CSA IS, CSA GP, Ex ec:
    Metal M20x1.5 for cable Ø7 to 10 mm (0.28 to 0.39 in)
    Here, the material of the coupling depends on the housing type; GT19 (plastic housing) and GT20 (aluminum housing): brass (CuZn).
  - For Ex db:
    No cable gland available
- Thread
  - ½" NPT
  - G ½"
  - M20 × 1.5
- M12 plug / 7/8" plug
  Only available for non-Ex, Ex ic, Ex ia

Connection of remote display FHX50

Feature 030 "Display, operation"	Cable entry for connection of FHX50
L: "Prepared for display FHX50 + M12 connection"	M12 socket
M: "Prepared for display FHX50 + custom connection"	M12 cable gland

Cable specification

- **Devices without integrated overvoltage protection**
  Pluggable spring-force terminals for wire cross-sections 0.5 to 2.5 mm^2 (20 to 14 AWG)
- **Devices with integrated overvoltage protection**
  Screw terminals for wire cross-sections 0.2 to 2.5 mm^2 (24 to 14 AWG)
- For ambient temperature T_U≥60 °C (140 °F): use cable for temperature T_U +20 K.

HART

- A normal device cable suffices if only the analog signal is used.
- A shielded cable is recommended if using the HART protocol. Observe grounding concept of the plant.

Overvoltage protection

If the measuring device is used for level measurement in flammable liquids which requires the use of overvoltage protection according to DIN EN 60079-14, standard for
test procedures 60060-1 (10 kA, pulse 8/20 µs), an overvoltage protection module has to be installed.

Integrated overvoltage protection module

An integrated overvoltage protection module is available for 2-wire HART devices.

Product structure: Feature 610 "Accessory mounted", option NA "Overvoltage protection".

Technical data	
Resistance per channel	2 × 0.5 Ω max.
Threshold DC voltage	400 to 700 V
Threshold impulse voltage	< 800 V
Capacitance at 1 MHz	< 1.5 pF
Nominal arrest impulse voltage (8/20 µs)	10 kA

External overvoltage protection module

HAW562 or HAW569 from Endress+Hauser are suited as external overvoltage protection.

Performance characteristics

Reference operating conditions

- Temperature = +24 °C (+75 °F) ±5 °C (±9 °F)
- Pressure = 960 mbar abs. (14 psia) ±100 mbar (±1.45 psi)
- Humidity = 60 % ±15 %
- Reflector: metal plate with diameter ≥ 1 m (40 in)
- No major interference reflections inside the signal beam

Reference accuracy

Typical data under reference operating conditions: DIN EN IEC 61298-2 / DIN EN IEC 60770-1; percentage values in relation to the span.

Output:	digital	analog [1]
Accuracy (sum of non-linearity, non-repeatability and hysteresis) [2]	Measuring distance up to 0.8 m (2.62 ft): max. ±4 mm (±0.16 in)	±0.03 %
	Measuring distance > 0.8 m (2.62 ft): ±1 mm (±0.04 in)	±0.02 %
Non-repeatability [3]	≤1 mm (0.04 in)	

1) Add error of the analog value to the digital value.
2) If the reference conditions are not met, the offset/zero point resulting from the installation conditions can be up to ±4 mm (0.16 in). This additional offset/zero point can be compensated for by entering a correction ("Level correction" parameter) during commissioning.
3) The non-repeatability is already considered in the accuracy.

Differing values in near-range applications

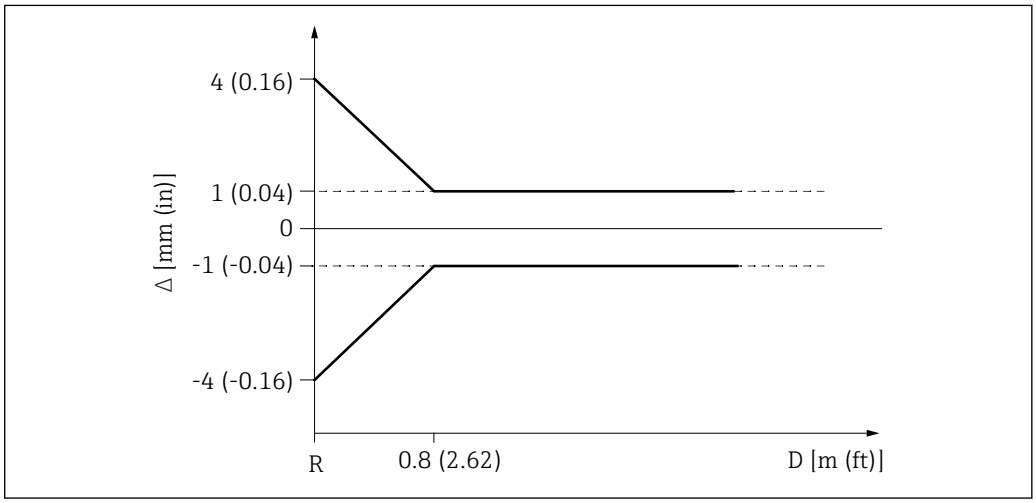

13 Maximum measured error in near-range applications

Δ Maximum measured error
R Reference point of the distance measurement
D Distance from reference point of antenna

Measured value resolution

Dead band according to DIN EN IEC 61298-2 / DIN EN IEC 60770-1:

- Digital: 1 mm
- Analog: 1 µA

Response time

In accordance with DIN EN IEC 61298-2 / DIN EN IEC 60770-1, the step response time is the time following an abrupt change in the input signal up until the changed output signal has adopted 90% of the steady-state value for the first time.

The response time can be configured.

The following step response times apply (in accordance with DIN EN IEC 61298-2 / DIN EN IEC 60770-1) when damping is switched off:
- Measuring rate ≥ 1.3 s^{-1} at U ≥ 24 V
- Step response time < 3.6 s

Influence of ambient temperature

The measurements are performed according to DIN EN IEC 61298-3 / DIN EN IEC 60770-1
- Digital (HART): average T_C = 2 mm/10 K
- Analog (current output):
  - Zero point (4 mA): average T_C = 0.02 %/10 K
  - Span (20 mA): average T_C = 0.05 %/10 K

Influence of gas phase

High pressure reduces the speed of propagation of the measuring signals in the gas/vapor above the medium. This effect depends on the type of gas phase and its temperature. This results in a systematic measured error that increases with increasing distance between the reference point of the measurement (flange) and the surface of the product. The following table shows this measured error for a few typical gases/vapors (with regard to the distance, a positive value means that a too large distance is measured):

Gas phase	Temperature		Pressure		
	°C	°F	1 bar (14.5 psi)	10 bar (145 psi)	25 bar (362 psi)
Air/nitrogen	20	68	0.00 %	0.22 %	0.58 %
	200	392	−0.01 %	0.13 %	0.36 %
	400	752	−0.02 %	0.08 %	0.29 %
Hydrogen	20	68	−0.01 %	0.10 %	0.25 %
	200	392	−0.02 %	0.05 %	0.17 %
	400	752	−0.02 %	0.03 %	0.11 %
Water (saturated steam)	100	212	0.02 %	-	-
	180	356	-	2.1 %	-
	263	505.4	-	-	4.15 %
	310	590	-	-	-
	364	687	-	-	-

With a known, constant pressure, it is possible to compensate for this measured error with a linearization, for example.

Installation

Installation conditions

Orientation - Liquid media

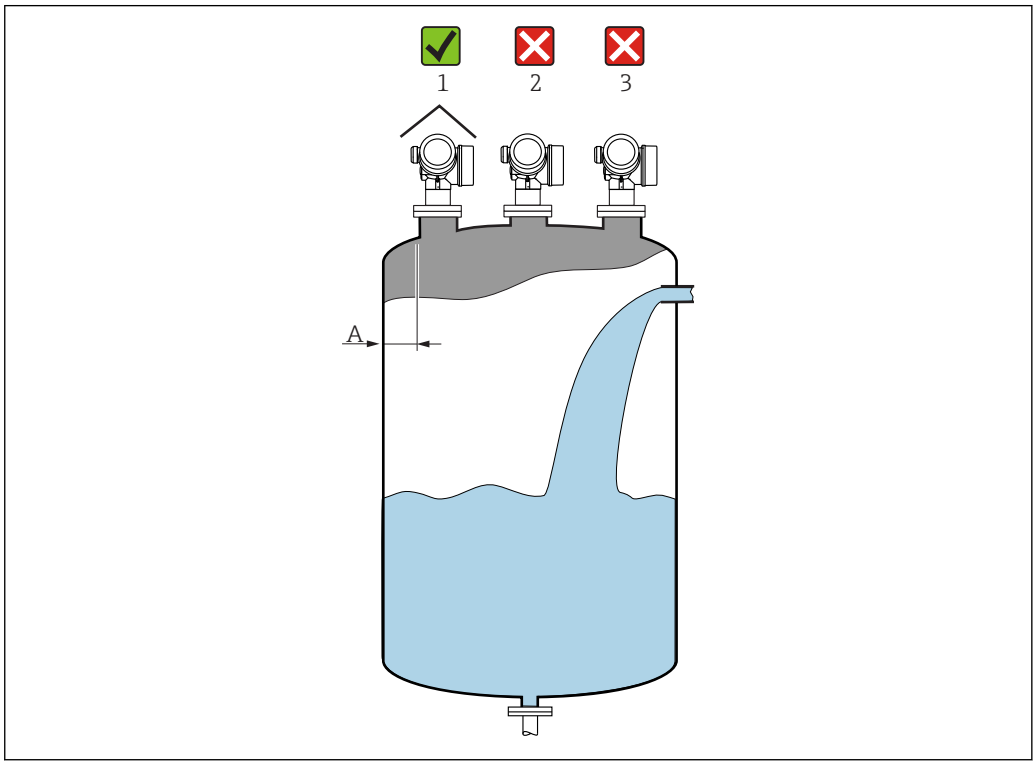

A0016882

- Recommended distance **A** wall - nozzle outer edge: ~ 1/6 of the vessel diameter. However, the device must not under any circumstances be mounted closer than 15 cm (5.91 in) to the tank wall.
- Not in the center (2) as interference can cause signal loss.
- Not above the filling curtain (3).
- The use of a weather protection cover (1) is recommended to protect the transmitter from direct sunlight or rain.

Internal vessel fittings

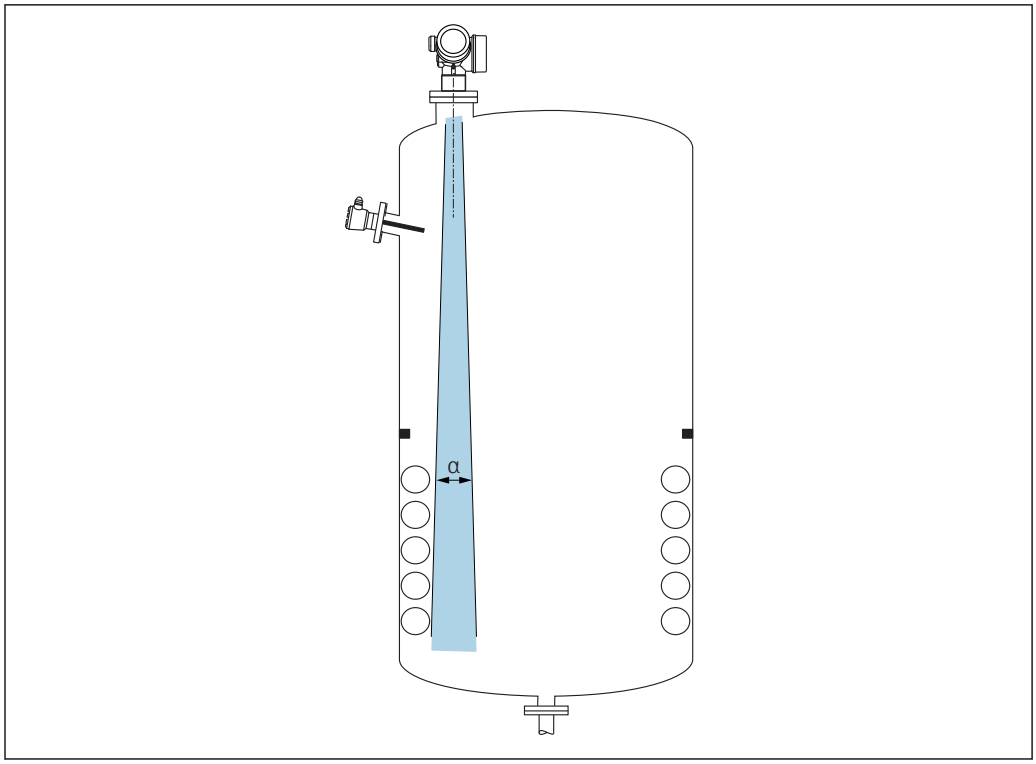

A0031777

Avoid the location of internal fittings (limit switches, temperature sensors, struts, vacuum rings, heating coils, baffles etc.) inside the signal beam. Take the beam angle into account.

Avoiding interference echoes

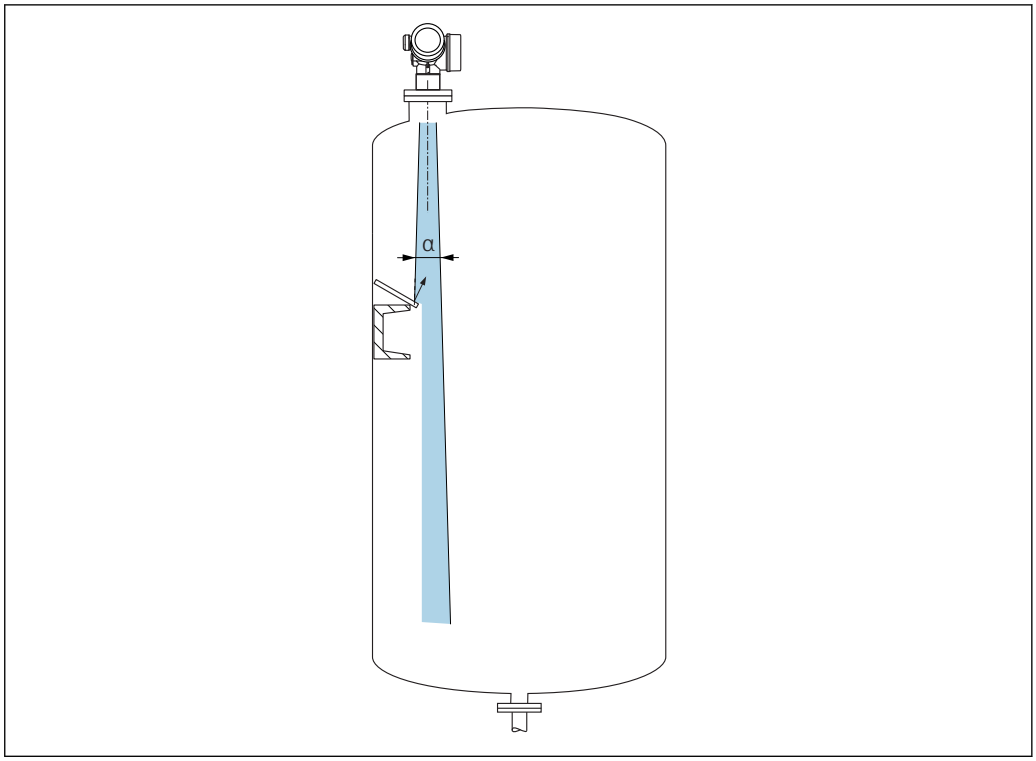

A0031813

Metal deflector plates, installed at an angle to scatter the radar signals, help prevent interference echoes.

Optimization options

- Antenna size
  The larger the antenna the smaller the beam angle α, resulting in fewer interference echoes.
- Interference echo suppression (mapping)
  Measurement can be optimized by electronically suppressing interference echoes.
  See also **Confirm distance** parameter.

Beam angle

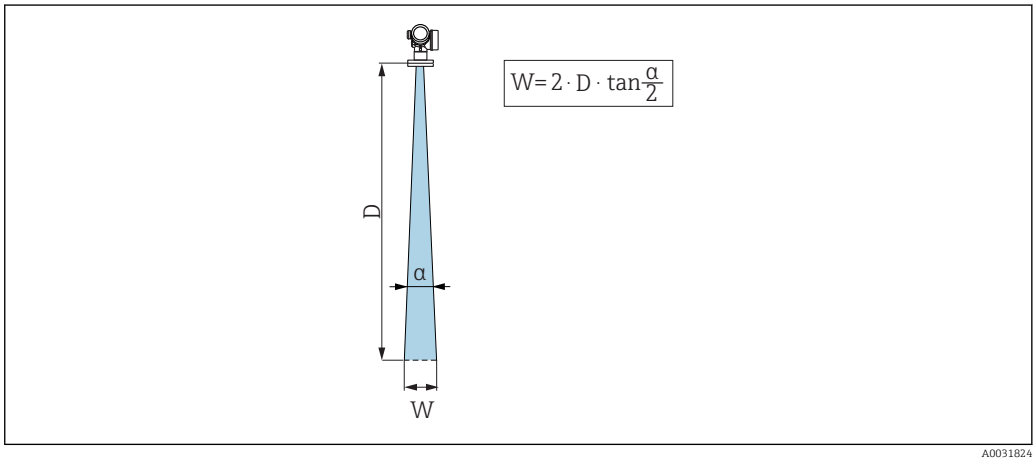

A0031824

14 Relationship between beam angle α, distance D and beamwidth diameter W

The beam angle is defined as the angle α where the energy density of the radar waves reaches half the value of the maximum energy density (3dB width). Microwaves are also emitted outside the signal beam and can be reflected off interfering installations.

Beam diameter **W** as a function of beam angle **α** and distance **D**.

Drip-off, PTFE 50 mm (2 in) antenna, α 6 °
W = D × 0.10

Measurement through a ball valve

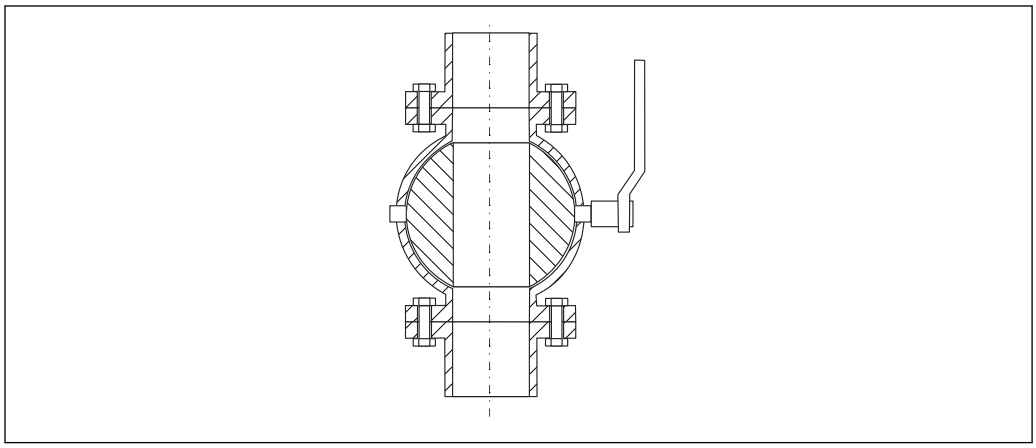

A0034564

- Measurements can be performed through an open full bore ball valve without any problems.
- At the transitions, no gap may be left exceeding 1 mm (0.04 in).
- Diameter of opening of ball valve must always be equivalent to pipe diameter; avoid edges and constrictions.

External measurement through plastic cover or dielectric windows

- Dielectric constant of medium: $\varepsilon_r \geq 10$
- The distance from the tip of the antenna to the tank should be approx. 100 mm (4 in).
- If possible, avoid installation positions in which condensate or buildup can form between the antenna and the vessel.
- In the case of outdoor installations, ensure that the area between the antenna and the tank is protected from the weather.
- Do not install any fittings or attachments between the antenna and the tank that could reflect the signal.

Suitable thickness of tank roof or window

Material	PE	PTFE	PP	Perspex
ε_r (Dielectric constant of medium)	2.3	2.1	2.3	3.1
Optimum thickness	1.25 mm (0.049 in) [1]	1.3 mm (0.051) [1]	1.25 mm (0.049 in) [1]	1.07 mm (0.042 in) [1]

1) or an integer that is a multiple of this value; it should be noted here that the microwave transparency decreases significantly with increasing window thickness.

Free-space installation in vessel

Installation: Drip-off antenna, PTFE 50 mm / 2"

FMR60 - Aligning the antenna axis

Align the antenna so that it is perpendicular to the product surface.

Caution:

The maximum reach of the antenna can be reduced, or additional interference signals can occur, if the antenna is not installed perpendicular to the product.

Radial alignment of the antenna

Based on the directional characteristic, radial alignment of the antenna is not necessary.

Information concerning nozzles

The maximum nozzle length H_{max} depends on the nozzle diameter *D*:

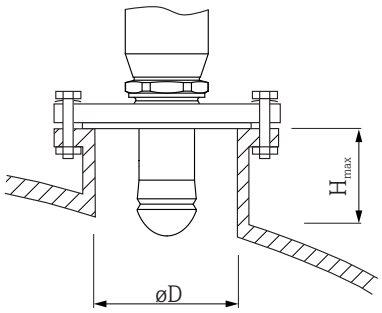

A0032209

Nozzle diameter (ØD)	Maximum nozzle length H_{max} (In the case of longer nozzles, a reduced measuring performance must be expected)
50 to 80 mm (2 to 3.2 in)	750 mm (30 in)
80 to 100 mm (3.2 to 4 in)	1 150 mm (46 in)
100 to 150 mm (4 to 6 in)	1 450 mm (58 in)
≥150 mm (6 in)	2 200 mm (88 in)

Note the following if the antenna does not project out of the nozzle:
- The end of the nozzle must be smooth and free from burrs. The edge of the nozzle should be rounded if possible.
- Mapping must be performed.
- Please contact Endress+Hauser for applications with nozzles that are higher than indicated in the table.

Information concerning threaded connections

- When screwing in, turn by the hex bolt only.
- Tool: open-ended wrench 55 mm
- Maximum permissible torque: 50 Nm (36 lbf ft)

Container with heat insulation

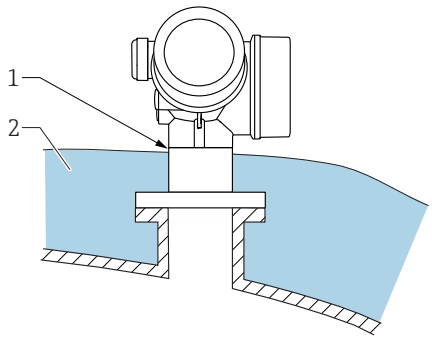

A0032207

If process temperatures are high, the device should be included in the usual container insulation system (2) to prevent the electronics from heating as a result of thermal radiation or convection. The insulation should not be higher than the neck of the device (1).

Turning the transmitter housing

To provide easier access to the connection compartment or display module, the transmitter housing can be turned:

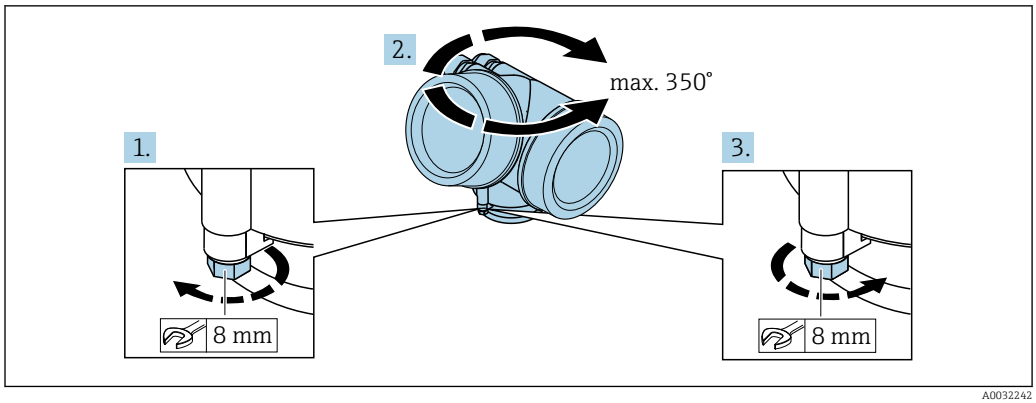

A0032242

1. Unscrew the securing screw using an open-ended wrench.
2. Rotate the housing in the desired direction.
3. Tighten the securing screw (1.5 Nm for plastic housing; 2.5 Nm for aluminum or stainless steel housing).

Turning the display

Opening the cover

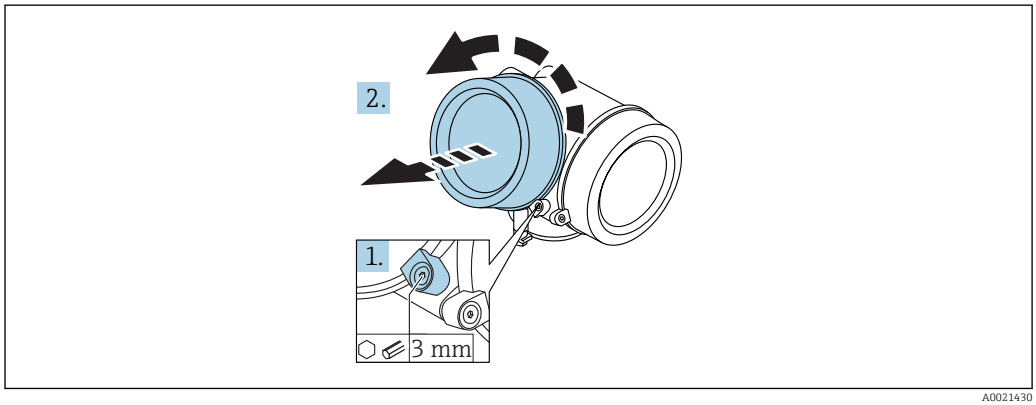

A0021430

1. Loosen the screw of the securing clamp of the electronics compartment cover using an Allen key (3 mm) and turn the clamp 90 ° counterclockwise.
2. Unscrew the cover and check the cover seal, replace it if necessary.

Turning the display module

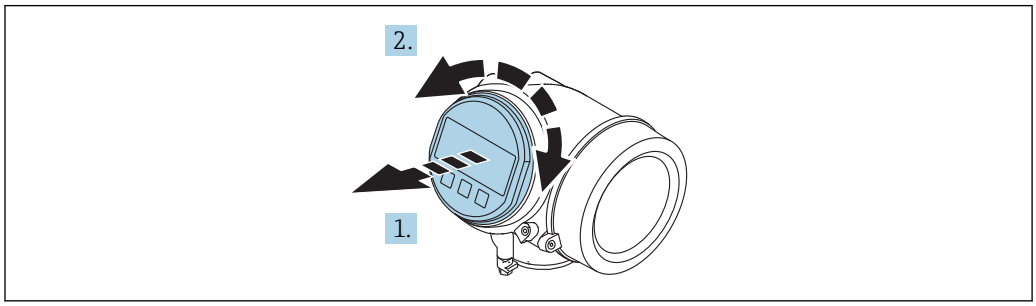

A0036401

1. Pull out the display module with a gentle rotational movement.
2. Turn the display module to the desired position: max. 8 × 45 ° in each direction.
3. Feed the coiled cable into the gap between the housing and main electronics module and plug the display module into the electronics compartment until it engages.

Closing the cover of the electronics compartment

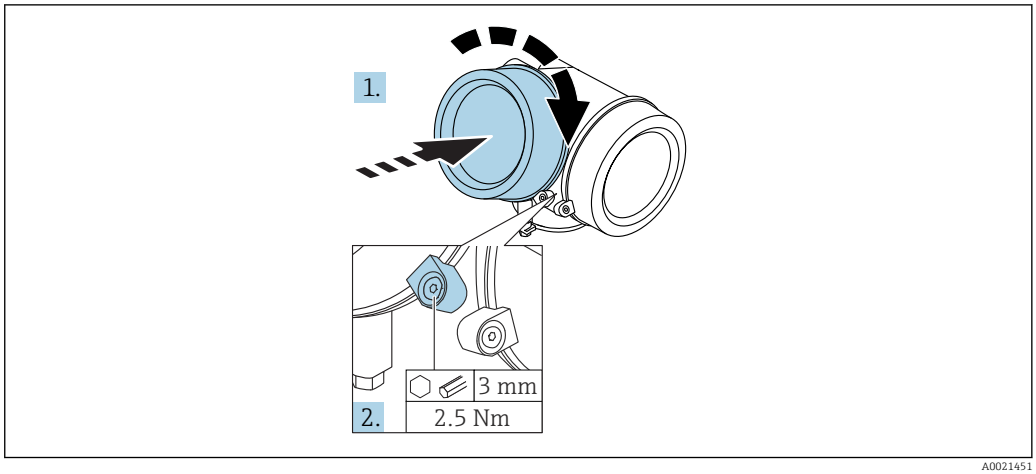

A0021451

1. Screw down the cover of the electronics compartment.
2. Turn the securing clamp 90 ° clockwise and tighten the screw of the securing clamp of the electronics compartment cover with 3 mm using the Allen key (2.5 Nm).

Post-installation check

❑ Is the device undamaged (visual inspection)?

❑ Does the device comply with the measuring point specifications?
- Process temperature
- Process pressure
- Ambient temperature range
- Measuring range

❑ Are the measuring point identification and labeling correct (visual inspection)?

❑ Is the device adequately protected against precipitation and direct sunlight?

❑Is the device adequately protected against impact?

❑Are all mounting and safety screws securely tightened?

❑ Is the device properly secured?

Environment

Ambient temperature range

Measuring device	−40 to +80 °C (−40 to +176 °F)
Local display	−20 to +70 °C (−4 to +158 °F), the readability of the display may be impaired at temperatures outside the temperature range.

For outdoor operation in strong sunlight:
- Mount the device in the shade.
- Avoid direct sunlight, particularly in warm climatic regions.
- Use a weather protection cover (see accessories).

Ambient temperature limits

The following diagrams only consider functional aspects. Additional restrictions may apply for certified device versions.

In the event of temperature (T_p) at the process connection, the permitted ambient temperature (T_a) is reduced as indicated in the following diagram (temperature derating) in the table header.

FMR60

Seal [1]
A3:
FKM Viton GLT, −40 to 80 °C (−40 to 176 °F)

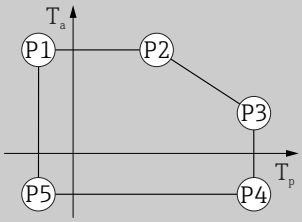

Temperature specifications: °C (°F)

A0032024

Housing type [2]	P1		P2		P3		P4		P5	
	T_p	T_a	T_p	T_a	T_p	T_a	T_p	T_a	T_p	T_a
A: GT19 dual compartment Plastic PBT	−40 (−40)	60 (140)	60 (140)	60 (140)	80 (176)	54 (129.2)	80 (176)	−40 (−40)	−40 (−40)	−40 (−40)
C: GT20 dual compartment Aluminum, coated	−40 (−40)	76 (168.8)	76 (168.8)	76 (168.8)	80 (176)	76 (168.8)	80 (176)	−40 (−40)	−40 (−40)	−40 (−40)

1) Feature 090 in the product structure
2) Feature 040 in the product structure

FMR60

Seal [1]
A4:
FKM Viton GLT,
−40 to 130 °C (−40 to 266 °F)

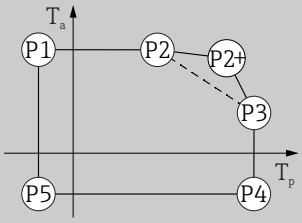

Temperature specifications: °C (°F)

A0032025

Housing type [2]	P1		P2		P2+		P3		P4		P5	
	T_p	T_a	T_p	T_a	T_p	T_a	T_p	T_a	T_p	T_a	T_p	T_a
A: GT19 dual compartment Plastic PBT	−40 (−40)	60 (140)	60 (140)	60 (140)	113 (235.4)	45 (113)	130 (266)	22 (71.6)	130 (266)	−40 (−40)	−40 (−40)	−40 (−40)
C: GT20 dual compartment Aluminum, coated	−40 (−40)	76 (168.8)	76 (168.8)	76 (168.8)	110 (230)	71 (159.8)	130 (266)	60 (140)	130 (266)	−40 (−40)	−40 (−40)	−40 (−40)

1) Feature 090 in the product structure
2) Feature 040 in the product structure

Storage temperature	−40 to +80 °C (−40 to +176 °F)
Climate class	DIN EN 60068-2-38 (test Z/AD)

Altitude according to IEC61010-1 Ed.3	▪ Generally up to 2 000 m (6 600 ft) above MSL.
	▪ Above 2 000 m (6 600 ft) if the following conditions are met:
	  ▪ Ordering feature 020 "Power supply; Output" = A, B, C, E or G (2-wire versions)
	  ▪ Supply voltage U < 35 V
	  ▪ Supply voltage of overvoltage category 1

Degree of protection	▪ When housing is closed, tested according to:
	  ▪ IP68, NEMA6P (24 h at 1.83 m under water)
	  ▪ For plastic housing with see-through lid (display): IP68 (24 h at 1.00 m under water)
	  This restriction applies if the following options have been selected simultaneously in the product structure: 030 ("Display/operation") = C ("SD02") or E ("SD03"); 040 ("Housing") = A ("GT19").
	  ▪ IP66, NEMA4X
	▪ With housing open: IP20, NEMA1
	▪ Display module: IP22, NEMA2
	Degree of protection IP68 NEMA6P only applies for M12 PROFIBUS PA plugs if the PROFIBUS cable is plugged in and is also rated IP68 NEMA6P.

Vibration resistance	DIN EN 60068-2-64 IEC 60068-2-64 at 5 to 2 000 Hz: 1.5 $(m/s^2)^2/Hz$
Electromagnetic compatibility (EMC)	Electromagnetic compatibility in accordance with all of the relevant requirements outlined in the EN 61326 series and NAMUR Recommendation EMC (NE 21). For details, refer to the Declaration of Conformity. Download at www.endress.com A normal device cable suffices if only the analog signal should be used. Use a shielded cable for digital communication (HART/ PA/ FF). Always use a shielded cable for the electronic version "2-wire, 4-20 mA HART + 4-20 mA analog". Maximum measured error during EMC testing: < 0.5 % of the span. By way of derogation, for devices with a plastic housing and see-through lid (integrated display SD02 or SD03) the measured error can be up to 2 % of the span in the event of strong electromagnetic radiation in the 1 to 2 GHz frequency range.

Process

Process temperature, process pressure

The pressure ranges indicated can be reduced by the choice of process connection. The nominal pressure (PN) indicated on the nameplate refers to a reference temperature of 20 °C, and of 100 °F for ASME flanges. Observe pressure-temperature dependency.

Please refer to the following standards for the pressure values permitted at higher temperatures:
- EN 1092-1: 2001 Tab. 18
  With regard to their stability-temperature property, the materials 1.4435 and 1.4404 are grouped together under 13EO in EN 1092-1 Tab. 18. The chemical composition of the two materials can be identical.
- ASME B 16.5a – 1998 Tab. 2-2.2 F316
- ASME B 16.5a – 1998 Tab. 2.3.8 N10276
- JIS B 2220

FMR60 threaded process connection

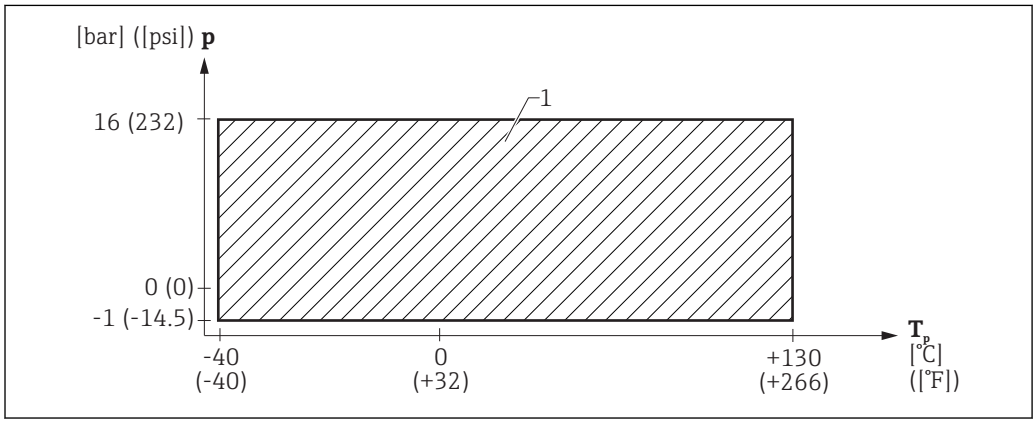

15 FMR60: Permitted range for process temperature and process pressure

1 Feature 90, seal: A4, FKM Viton GLT

FMR60 threaded process connection

Feature 100 "Process connection"	Feature 90 "Seal"	Process temperature range	Process pressure range
Thread ▪ GGJ: ISO228 G1-1/2 ▪ RGJ: ANSI MNPT1-1/2	A4, FKM Viton GLT	−40 to +130 °C (−40 to +266 °F)	p_{rel} = −1 to 16 bar (−14.5 to 232 psi) [1]

1) The pressure range may be reduced further if the device has a CRN approval

FMR60 flange process connection

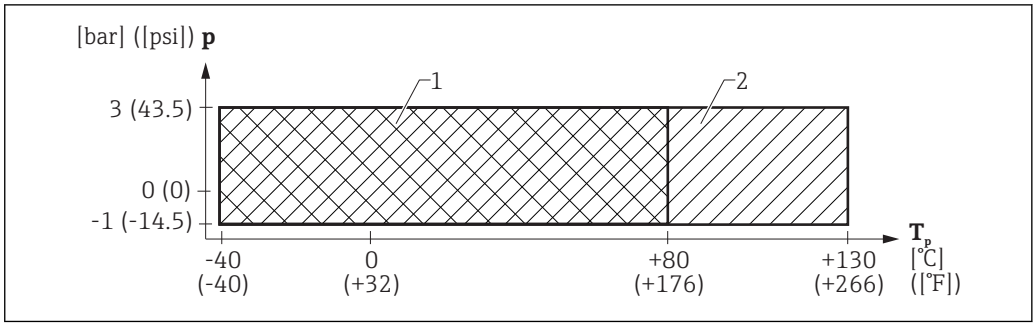

16 FMR60: Permitted range for process temperature and process pressure

1 Process connection: flange PP
2 Process connection: flange 316L

FMR60 flange process connection

Feature 100 "Process connection"	Process temperature range	Process pressure range
UNI flange ▪ XJG: 3"/DN80/80A, PP ▪ XKG: 4"/DN100/100A, PP ▪ XLG: 6"/DN150/150A, PP	−40 to +80 °C (−40 to +176 °F)	p_{rel} = −1 to 3 bar (−14.5 to 43.5 psi) p_{abs} < 4 bar (58 psi) [1]
UNI flange ▪ XJJ: 3"/DN80/80A, 316L ▪ XKJ: 4"/DN100/100A, 316L ▪ XLJ: 6"/DN150/150A, 316L	−40 to +130 °C (−40 to +266 °F)	

1) The pressure range may be reduced further if the device has a CRN approval

Dielectric constant

For liquids
$\varepsilon_r \geq 1.9$

Please contact Endress+Hauser for applications with lower dielectric constants than indicated.

For dielectric constants (DC values) of many media commonly used in various industries refer to:
- the Endress+Hauser DC manual (CP01076F)
- the Endress+Hauser "DC Values App" (available for Android and iOS)

Minimum level for low dielectric constants

80 mm (3.15 in) above the bottom of the tank

- This minimum level applies for media with $\varepsilon_r \leq 4$
- The tank bottom may be visible through the medium at lower levels. For this reason, the accuracy is reduced in this range.

Mechanical construction

Dimensions

Dimensions of the electronics housing

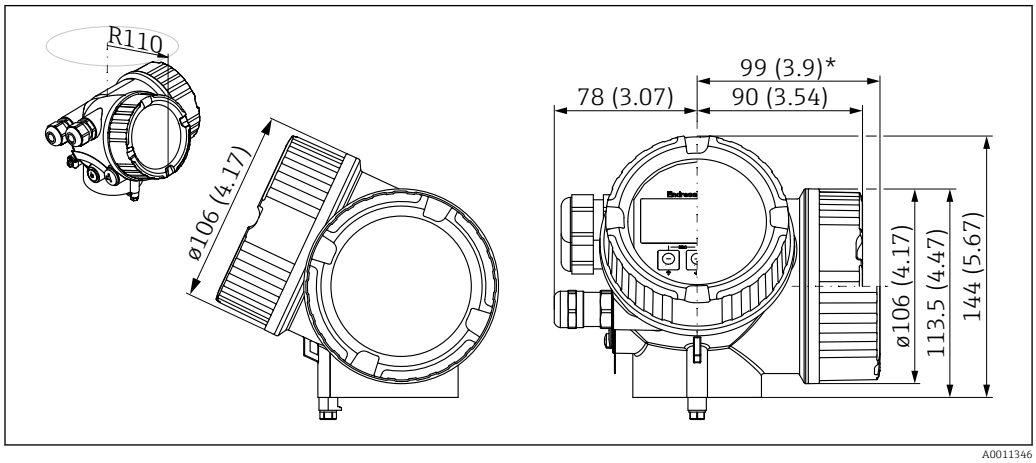

17 GT19 housing (plastic PBT). Unit of measurement mm (in)

**For devices with integrated overvoltage protection.*

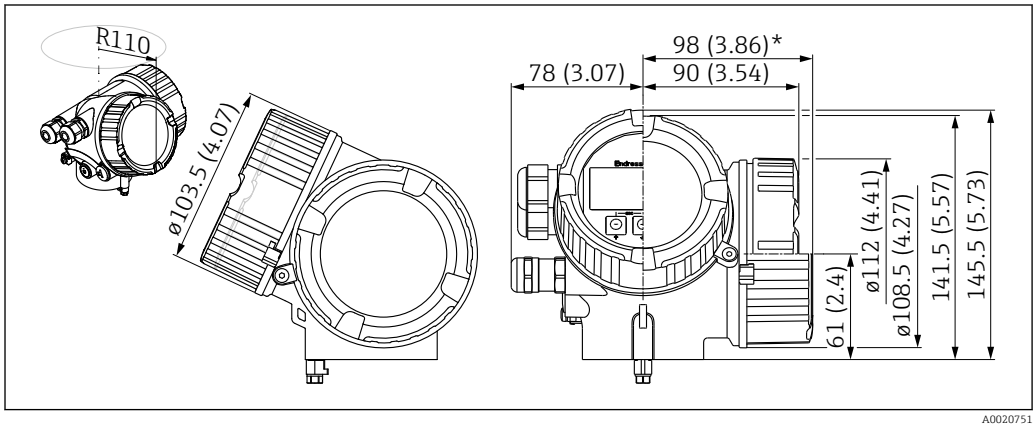

18 Housing GT20 (aluminum coated). Unit of measurement mm (in)

**For devices with integrated overvoltage protection.*

FMR60: Antenna and process connection

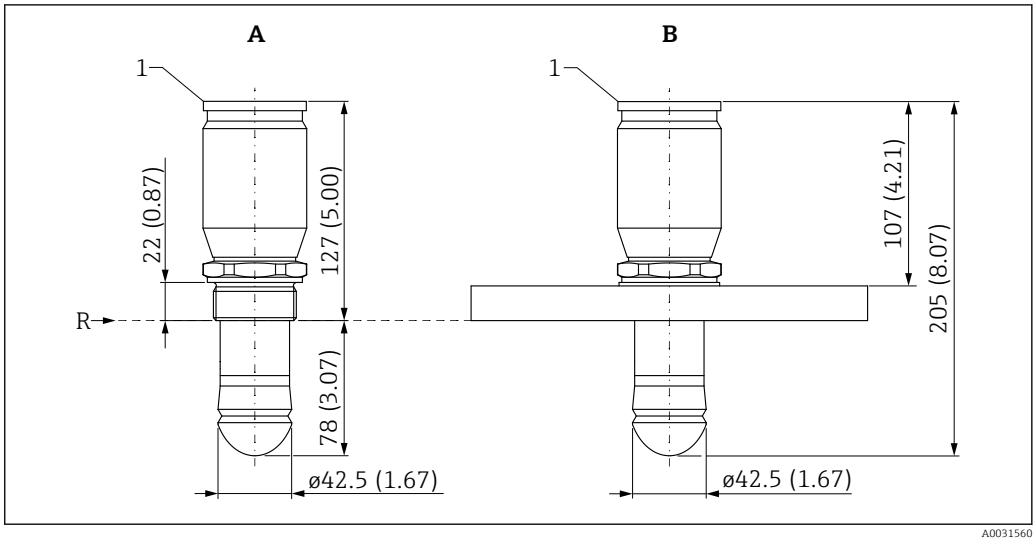

19 Dimensions: mm (in)

A Process connection: G1-1/2" or MNPT1-1/2" thread
B Process connection: UNI flange 3"/DN80/80A to 6"/DN150/150A
R Reference point of measurement
1 Bottom edge of housing

UNI flanges for FMR60

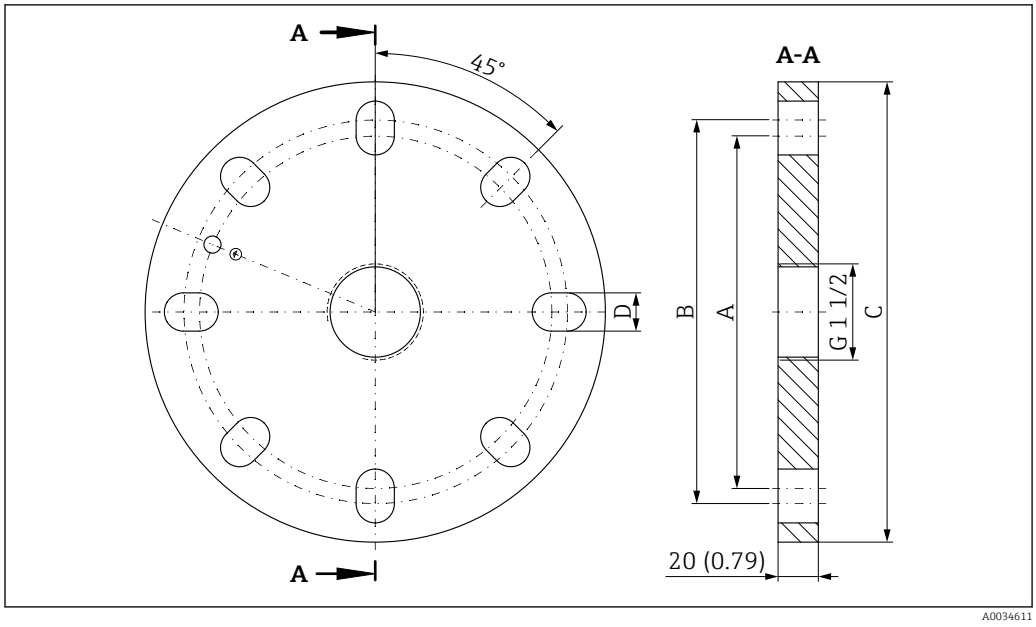

20 Dimensions: mm (in)

Feature 100: process connection	Suitable for	A	B	C	D
▪ XJG: UNI flange 3"/DN80/80A, PP ▪ XJJ: UNI flange 3"/DN80/80A, 316L	▪ 3" 150lbs ▪ DN80 PN16 ▪ 10K 80A	150 mm (5.9 in)	160 mm (6.3 in)	200 mm (7.9 in)	19 mm (0.75 in)
▪ XKG: UNI flange 4"/DN100/100A, PP ▪ XKJ: UNI flange 4"/DN100/100A, 316L	▪ 4" 150lbs ▪ DN100 PN16 ▪ 10K 100A	175 mm (6.9 in)	190.5 mm (7.5 in)	228.6 mm (9 in)	19 mm (0.75 in)
▪ XLG: UNI flange 6"/DN150/150A, PP ▪ XLJ: UNI flange 6"/DN150/150A, 316L	▪ 6" 150lbs ▪ DN150 PN16 ▪ 10K 150A	240 mm (9.4 in)	241.3 mm (9.5 in)	285 mm (11.2 in)	23 mm (0.9 in)

Weight

Housing

Part	Weight
GT19 housing - plastic	Approx. 1.2 kg (2.7 lb)
GT20 housing - aluminum	Approx. 1.9 kg (4.2 lb)

Antenna and process connection

Device	Antenna [1]	Weight of antenna / Process connection
FMR60	GA: Drip-off, PTFE DN50	Max. 2 kg (4.41 lb) + flange weight [2]

1) Order code 070
2) For flange weights (316/316L) see Technical Information TI00426F.

Materials: GT19 housing (plastic)

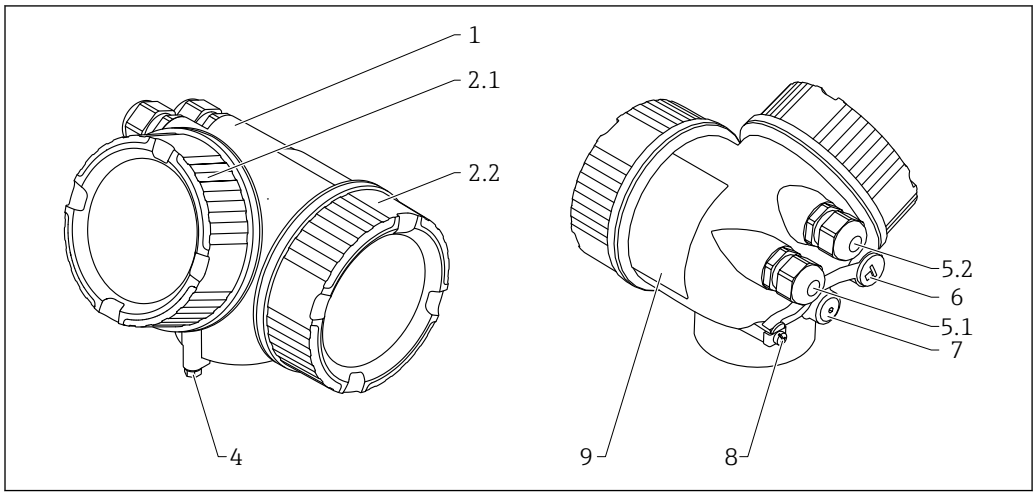

A0013788

No.	Component part	Material
1	Housing	PBT
2.1	Electronics compartment cover	▪ Sight glass: PC ▪ Rim: PBT-PC ▪ Cover seal: EPDM ▪ Thread coating: graphite-based lubricant varnish
2.2	Connection compartment cover	▪ Cover: PBT ▪ Cover seal: EPDM ▪ Thread coating: graphite-based lubricant varnish
4	Safety device on housing neck	▪ Screw: A4-70 ▪ Clamp: 316L (1.4404)

5.1	Dummy plug, coupling, adapter or connector (depending on device version)	▪ Dummy plug, depending on device version:
		  ▪ PE
		  ▪ PBT-GF
		▪ Coupling, depending on device version:
		  ▪ Brass (CuZn), nickel-plated
		  ▪ PA
		▪ Adapter: 316L (1.4404/1.4435)
		▪ Seal: EPDM
		▪ Connector M12: brass, nickel-plated [1)]
		▪ Connector 7/8": 316 (1.4401) [2)]

5.2	Dummy plug, coupling or adapter (depending on device version)	▪ Dummy plug, depending on device version:
		  ▪ PE
		  ▪ PBT-GF
		  ▪ Steel, galvanized
		▪ Coupling, depending on device version:
		  ▪ Brass (CuZn), nickel-plated
		  ▪ PA
		▪ Adapter: 316L (1.4404/1.4435)
		▪ Seal: EPDM

6	Dummy plug or M12 socket (depending on device version)	▪ Dummy plug: brass (CuZn), nickel-plated ▪ M12 socket: GD-Zn, nickel-plated
7	Pressure compensation vent	Brass (CuZn), nickel-plated
8	Ground terminal	▪ Screw: A2 ▪ Spring washer: A4 ▪ Clamp: 304 (1.4301) ▪ Bracket: 304 (1.4301)
9	Adhesive nameplate	Plastic

1) In the version with M12 connector, the seal material is Viton.
2) In the version with 7/8" connector, the seal material is NBR.

Materials: GT20 housing (die-cast aluminum, powder-coated)

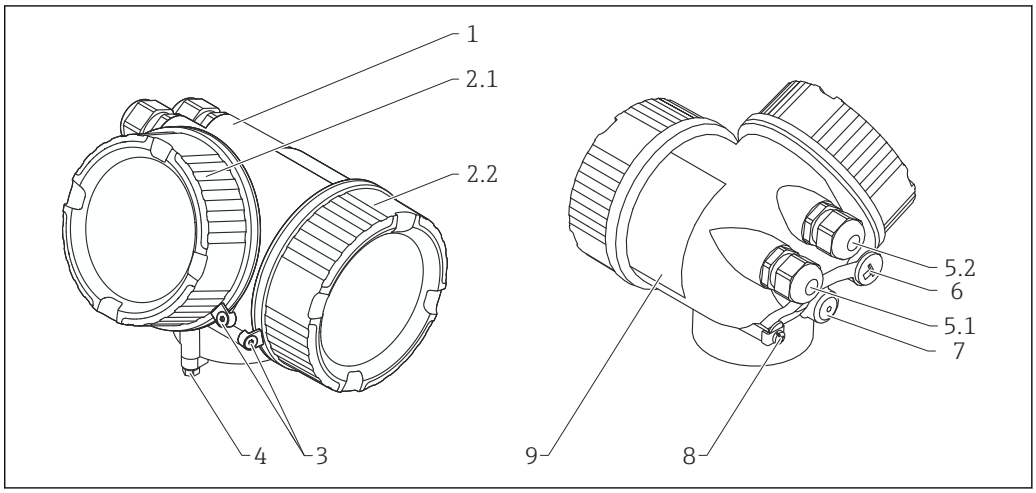

A0036037

No.	Component part	Material
1	Housing, RAL 5012 (blue)	▪ Housing: AlSi10Mg(<0.1% Cu) ▪ Coating: polyester
2.1	Electronics compartment cover, RAL 7035 (gray)	▪ Cover: AlSi10Mg(<0.1% Cu) ▪ Window: glass ▪ Cover seal: NBR ▪ Window seal: NBR ▪ Thread coating: graphite-based lubricant varnish
2.2	Connection compartment cover, RAL 7035 (gray)	▪ Cover: AlSi10Mg(<0.1% Cu) ▪ Cover seal: NBR ▪ Thread coating: graphite-based lubricant varnish
3	Cover clamp	▪ Screw: A4 ▪ Clamp: 316L (1.4404)
4	Safety device on housing neck	▪ Screw: A4-70 ▪ Clamp: 316L (1.4404)

5.1	Dummy plug, coupling, adapter or connector (depending on device version)	▪ Dummy plug, depending on device version:
		  ▪ PE
		  ▪ PBT-GF
		▪ Coupling, depending on device version:
		  ▪ Brass (CuZn), nickel-plated
		  ▪ PA
		▪ Adapter: 316L (1.4404/1.4435)
		▪ Seal: EPDM
		▪ M12 plug: brass, nickel-plated [1)]
		▪ 7/8" plug: 316 (1.4401) [2)]

5.2	Dummy plug, coupling or adapter (depending on device version)	▪ Dummy plug, depending on device version:
		  ▪ PE
		  ▪ PBT-GF
		  ▪ Steel, galvanized
		▪ Coupling, depending on device version:
		  ▪ Brass (CuZn), nickel-plated
		  ▪ PA
		▪ Adapter: 316L (1.4404/1.4435)
		▪ Seal: EPDM

6	Dummy plug or M12 socket (depending on device version)	▪ Dummy plug: brass (CuZn), nickel-plated ▪ M12 socket: GD-Zn, nickel-plated
7	Pressure compensation vent	Brass (CuZn), nickel-plated

No.	Component part	Material
8	Ground terminal	▪ Screw: A2 ▪ Spring washer: A2 ▪ Clamp: 304 (1.4301) ▪ Bracket: 304 (1.4301)
9	Adhesive nameplate	Plastic

1) In the version with the M12 plug, the seal material is Viton (different from standard).
2) In the version with the 7/8" plug, the seal material is NBR (different from standard).

Materials: antenna and process connection

FMR60

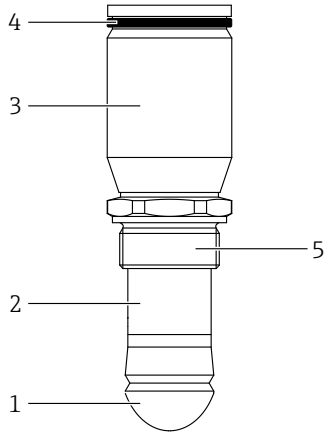

A0031812

No.	Component part	Material
1	Antenna	Antenna: PTFE Antenna seal: Viton (FKM)
2	Antenna adapter	316L / 1.4404
3	Housing adapter	316L / 1.4404
4	Housing seal	EPDM
5	Process connection	316L / 1.4404

Materials: Weather protection cover

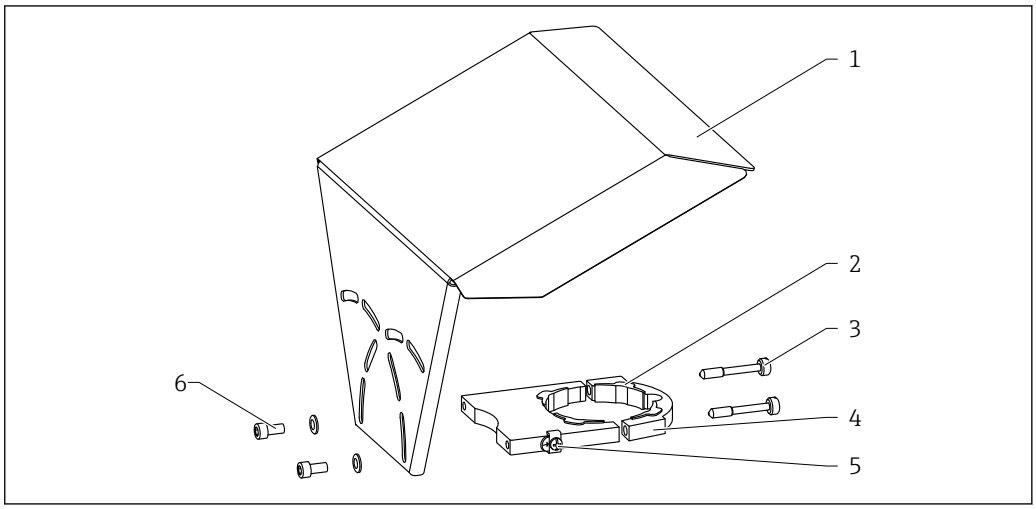

A0015473

No.	Component: Material
1	Protection cover: 316L (1.4404)
2	Rubber molded part (4x): EPDM
3	Tensioning screw: 316L (1.4404) + carbon thread
4	Holder: 316L (1.4404)
5	Ground terminal ▪ Screw: A4 ▪ Spring washer: A4 ▪ Clamp: 316L (1.4404) ▪ Bracket: 316L (1.4404)
6	▪ Washer: A4 ▪ Cylinder screw: A4-70

Operability

Operating concept

Operator-oriented menu structure for user-specific tasks
- Commissioning
- Operation
- Diagnostics
- Expert level

Operating languages
- English
- Deutsch
- Français
- Español
- Italiano
- Nederlands
- Portuguesa
- Polski
- русский язык (Russian)
- Svenska
- Türkçe
- 中文 (Chinese)
- 日本語 (Japanese)
- 한국어 (Korean)
- Bahasa Indonesia
- tiếng Việt (Vietnamese)
- čeština (Czech)

Feature 500 of the product structure determines which of these languages is preset on delivery.

Quick and save commissioning
- Interactive wizard with graphical interface for easy commissioning via FieldCare/DeviceCare
- Menu guidance with brief explanations of the individual parameter functions
- Standardized operation at the device and in the operating tools

Integrated data storage device (HistoROM)
- Enables transfer of configuration when changing electronic modules
- Records up to 100 event messages in the device
- Records up to 1000 measured values in the device
- Saves the signal curve on commissioning which can later be used as a reference.

Efficient diagnostics increase measurement reliability
- Remedy information is integrated in plain text
- Diverse simulation options and line recorder functions

Integrated Bluetooth module (option for HART devices)
- Easy and fast setup via SmartBlue (app)
- No additional tools or adapters required
- Signal curve via SmartBlue (app)
- Encrypted single point-to-point data transmission (Fraunhofer-Institut, third party, tested) and password-protected communication via Bluetooth® wireless technology

Local operation

Operation with	*Pushbuttons*	*Touch Control*
Order code for "Display; Operation"	Option **C** "SD02"	Option **E** "SD03"
	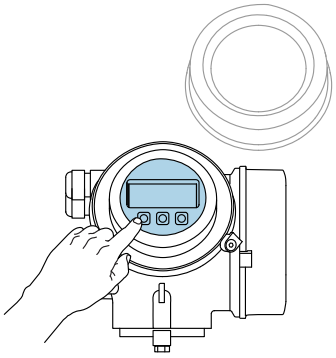 A0036312	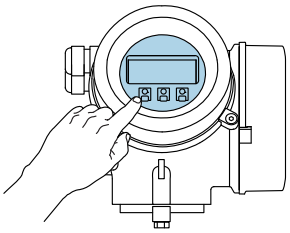 A0036313
Display elements	4-line display	4-line display white background lighting; switches to red in event of device error
	Format for displaying measured variables and status variables can be individually configured	
	Permitted ambient temperature for the display: −20 to +70 °C (−4 to +158 °F) The readability of the display may be impaired at temperatures outside the temperature range.	
Operating elements	local operation with 3 push buttons (⊞, ⊟, Ⓔ)	external operation via touch control; 3 optical keys: ⊞, ⊟, Ⓔ
	Operating elements also accessible in various hazardous areas	
Additional functionality	Data backup function The device configuration can be saved in the display module.	
	Data comparison function The device configuration saved in the display module can be compared to the current device configuration.	
	Data transfer function The transmitter configuration can be transmitted to another device using the display module.	

Operation with remote display and operating module FHX50

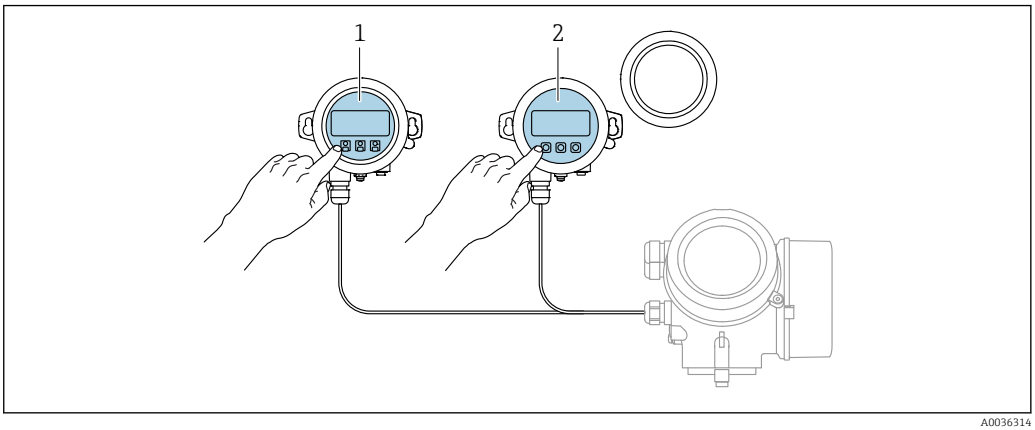

A0036314

21 FHX50 operating options

1 Display and operating module SD03, optical keys; can be operated through the glass of the cover
2 Display and operating module SD02, push buttons; cover must be removed

Operation via Bluetooth® wireless technology

Requirements

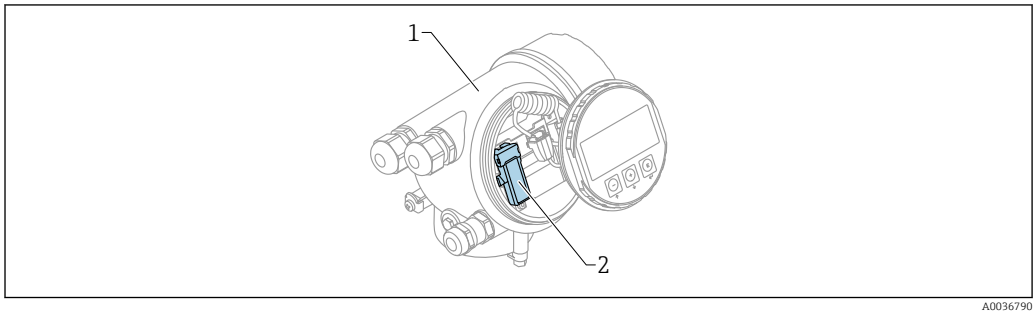

22 Device with Bluetooth module

1 Electronics housing of the device
2 Bluetooth module

This operation option is only available for devices with Bluetooth module. There are the following options:

- The device has been ordered with a Bluetooth module:
  Feature 610 "Accessory Mounted", option NF "Bluetooth"
- The Bluetooth module has been ordered as an accessory (ordering number: 71377355) and has been mounted. See Special Documentation SD02252F.

Operation via SmartBlue (app)

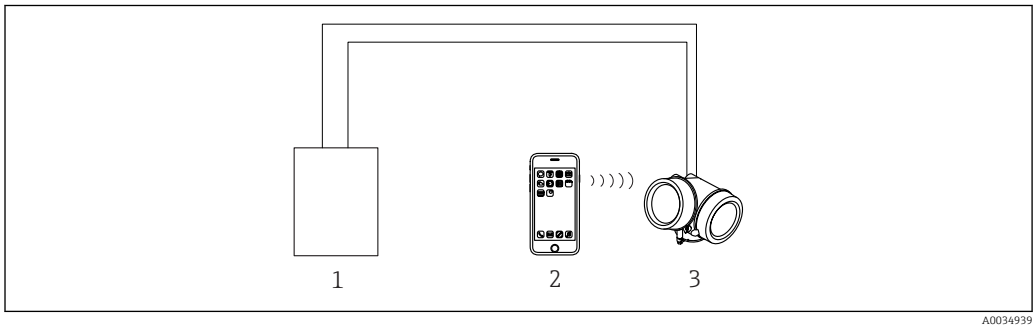

23 Operation via SmartBlue (app)

1 Transmitter power supply unit
2 Smartphone / tablet with SmartBlue (app)
3 Transmitter with Bluetooth module

Remote operation

Via HART protocol

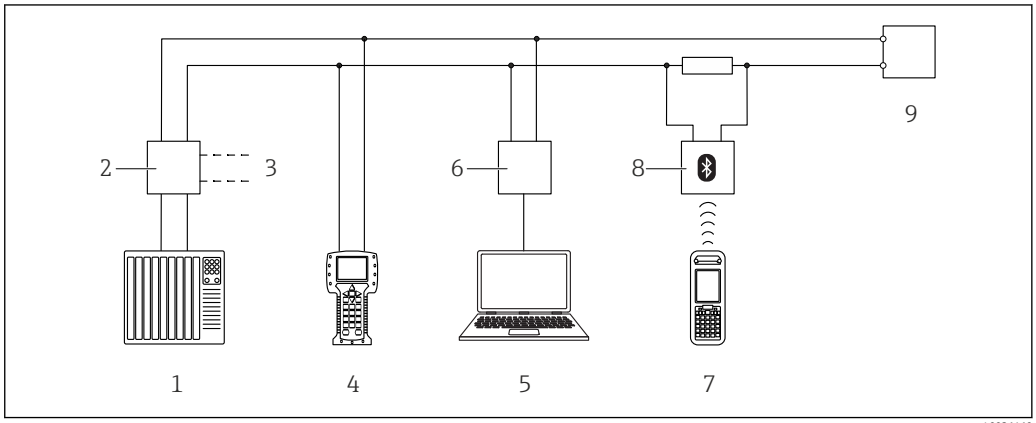

A0036169

24 *Options for remote operation via HART protocol*

1 *PLC (Programmable Logic Controller)*
2 *Transmitter power supply unit, e.g. RN221N (with communication resistor)*
3 *Connection for Commubox FXA191, FXA195 and Field Communicator 375, 475*
4 *Field Communicator 475*
5 *Computer with operating tool (e.g. DeviceCare/FieldCare , AMS Device Manager, SIMATIC PDM)*
6 *Commubox FXA191 (RS232) or FXA195 (USB)*
7 *Field Xpert SFX350/SFX370*
8 *VIATOR Bluetooth modem with connecting cable*
9 *Transmitter*

DeviceCare/FieldCare via service interface (CDI)

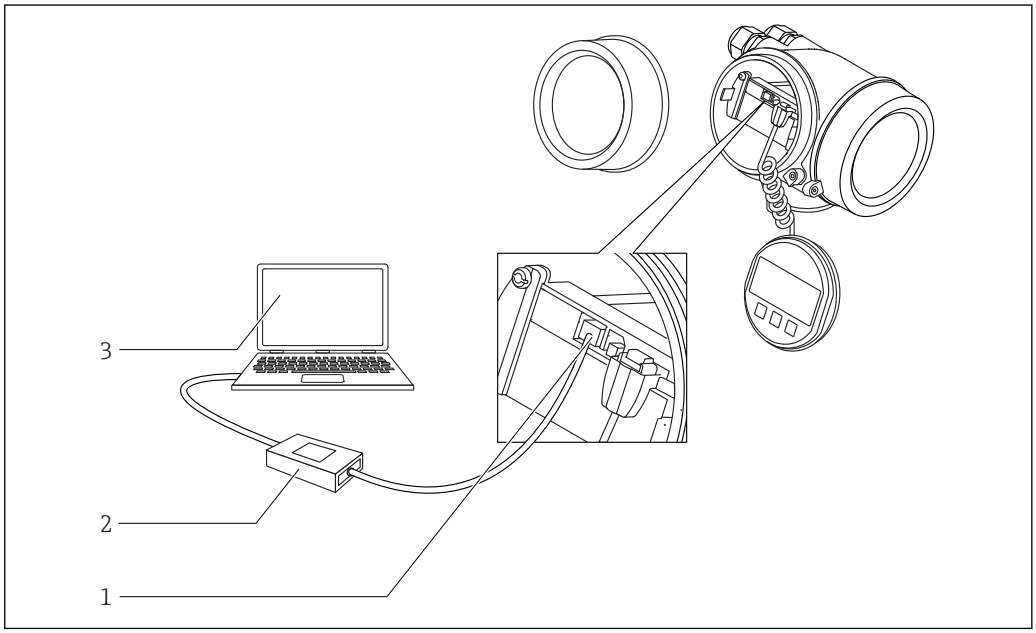

A0032466

25 *DeviceCare/FieldCare via service interface (CDI)*

1 *Service interface (CDI) of the instrument (= Endress+Hauser Common Data Interface)*
2 *Commubox FXA291*
3 *Computer with DeviceCare/FieldCare operating tool*

SupplyCare inventory management software

SupplyCare is a web-based operating program for coordinating the flow of material and information along the supply chain. SupplyCare provides a comprehensive overview of the levels of geographically distributed tanks and silos, for instance, providing complete transparency over the current inventory situation, regardless of time and location.

Based on the measuring and transmission technology installed onsite, the current inventory data are collected and sent to SupplyCare. Critical levels are clearly indicated and calculated forecasts provide additional security for material requirements planning.

The main functions of SupplyCare:

Inventory visualization

SupplyCare determines the inventory levels in tanks and silos at regular intervals. It displays current and historical inventory data and calculated forecasts of future demand. The overview page can be configured to suit the user's preferences.

Master data management

With SupplyCare you can create and manage the master data for locations, companies, tanks, products and users, as well as user authorization.

Report Configurator

The Report Configurator can be used to create personalized reports quickly and easily. The reports can be saved in a variety of formats, such as Excel, PDF, CSV and XML. The reports can be transmitted in many ways, such as by http, ftp or e-mail.

Event management

Events, such as when levels drop below the safety stock level or plan points, are indicated by the software. In addition, SupplyCare can also notify pre-defined users by e-mail.

Alarms

If technical problems occur, e.g. connection issues, alarms are triggered and alarm e-mails are sent to the System Administrator and the Local System Administrator.

Delivery planning

The integrated delivery planning function automatically generates an order proposal if a pre-set minimum inventory level is undershot. Scheduled deliveries and disposals are monitored continuously by SupplyCare. SupplyCare notifies the user if scheduled deliveries and disposals are not going to be met as planned.

Analysis

In the Analysis module, the most important indicators for the inflow and outflow of the individual tanks are calculated and displayed as data and charts. Key indicators of material management are automatically calculated and form the basis for optimizing the delivery and storage process.

Geographical visualization

All the tanks and the tank inventories are represented graphically on a map (based on Google Maps). The tanks and inventory situations can be filtered by tank group, product, supplier or location.

Multi-language support

The multi-language user interface supports 9 languages, thereby enabling global collaboration on a single platform. The language and settings are recognized automatically using the browser settings.

SupplyCare Enterprise

SupplyCare Enterprise runs by default as a service under Microsoft Windows on an application server in an Apache Tomcat environment. The operators and administrators operate the application via a Web browser from their workstations.

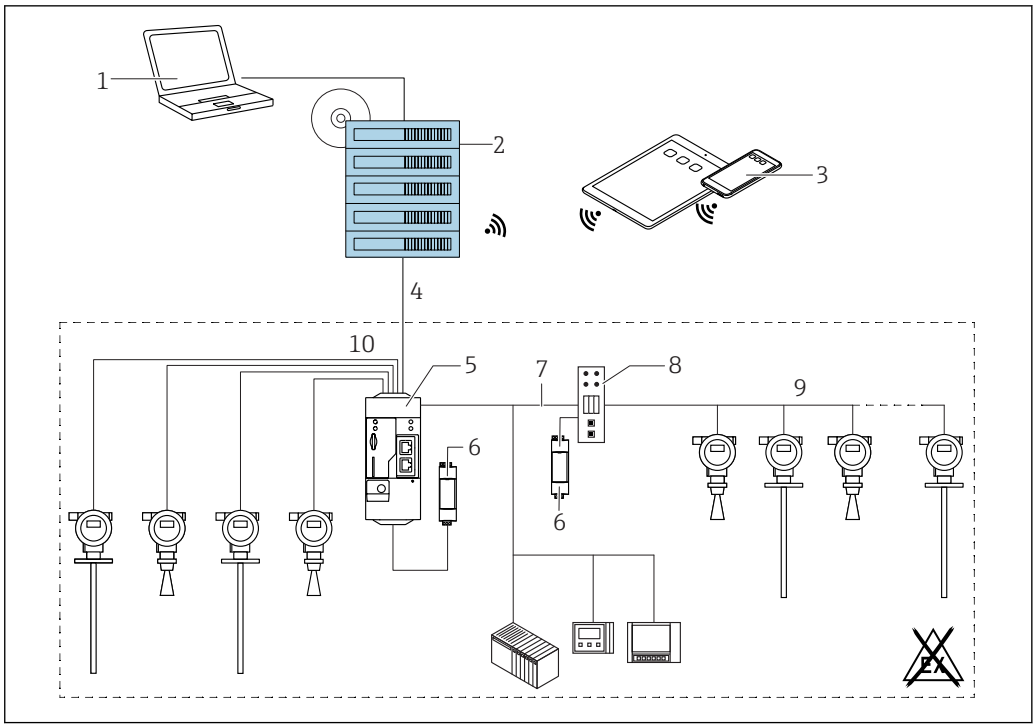

26 *Example of inventory management platform with SupplyCare Enterprise SCE30B*

1 *SupplyCare Enterprise (via Web browser)*
2 *SupplyCare Enterprise installation*
3 *SupplyCare Enterprise on mobile devices (via Web browser)*
4 *Ethernet/WLAN/UMTS*
5 *Fieldgate FXA42*
6 *Power supply 24 V DC*
7 *Modbus TCP via Ethernet as server/client*
8 *Converter from Modbus to HART Multidrop*
9 *HART Multidrop*
10 *4 x 4 to 20 mA analog input (2-wire/4-wire)*

Cloud-based application: SupplyCare Hosting

SupplyCare Hosting is offered as a hosting service (software as a service). Here, the software is installed within the Endress+Hauser IT infrastructure and made available to the user in the Endress +Hauser portal.

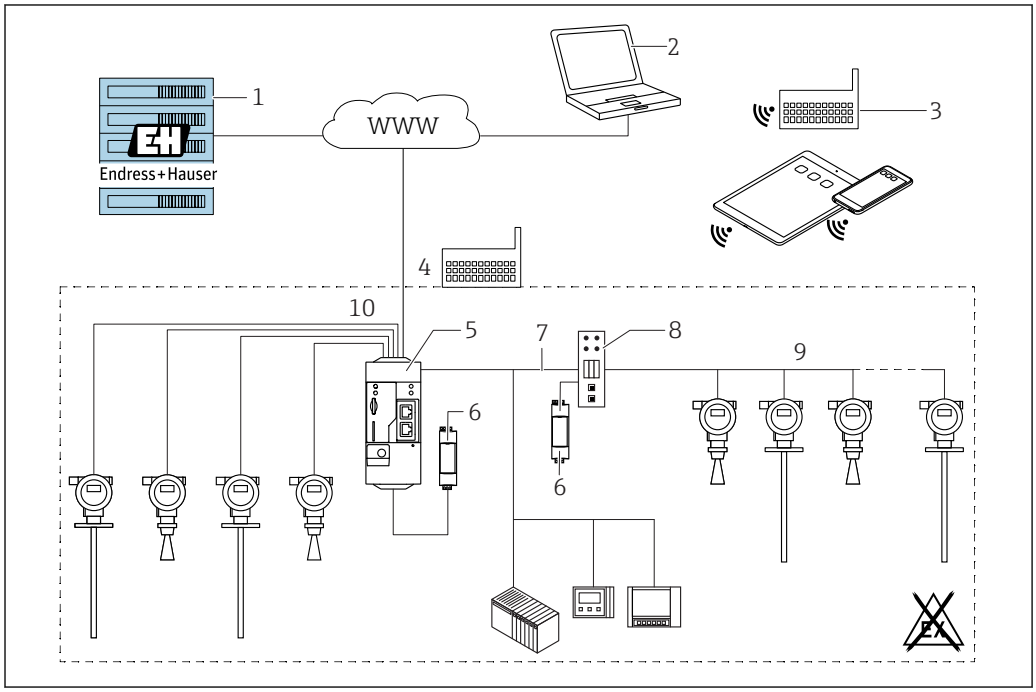

27 Example of inventory management platform with SupplyCare Hosting SCH30

1 *SupplyCare Hosting installation in Endress+Hauser data center*
2 *PC workstation with Internet connection*
3 *Warehouse locations with Internet connection via 2G/3G with FXA42 or FXA30*
4 *Warehouse locations with Internet connection with FXA42*
5 *Fieldgate FXA42*
6 *Power supply 24 V DC*
7 *Modbus TCP via Ethernet as server/client*
8 *Converter from Modbus to HART Multidrop*
9 *HART Multidrop*
10 *4 x 4 to 20 mA analog input (2-wire/4-wire)*

With SupplyCare Hosting, users do not need to make the initial software purchase or install and run the IT infrastructure needed. Endress+Hauser constantly update SupplyCare Hosting and enhance the capability of the software in conjunction with the customer. The hosted version of SupplyCare is thus always up-to-date and can be customized to meet different customer requirements. Other services are also offered in addition to the IT infrastructure and the software that is installed in a secure, redundant Endress+Hauser data center. These services include defined availability of the global Endress+Hauser Service and Support Organization and defined response times in a service event.

Certificates and approvals

Currently available certificates and approvals can be called up via the product configurator.

CE mark

The measuring system meets the legal requirements of the applicable EU Directives. These are listed in the corresponding EU Declaration of Conformity along with the standards applied.

Endress+Hauser confirms successful testing of the device by affixing to it the CE mark.

RoHS

The measuring system complies with the substance restrictions of the Restriction on Hazardous Substances Directive 2011/65/EU (RoHS 2).

RCM-Tick marking

The supplied product or measuring system meets the ACMA (Australian Communications and Media Authority) requirements for network integrity, interoperability, performance characteristics as well as health and safety regulations. Here, especially the regulatory arrangements for electromagnetic compatibility are met. The products are labelled with the RCM- Tick marking on the name plate.

A0029561

Ex approval

- ATEX
- IECEx
- CSA
- FM
- NEPSI
- KC
- INMETRO
- JPN
- EAC

Additional safety instructions must be followed for use in hazardous areas. Please refer to the separate "Safety Instructions" (XA) document included in the delivery. Reference to the applicable XA can be found on the nameplate.

Dual seal according to ANSI/ISA 12.27.01

The devices have been designed according to ANSI/ISA 12.27.01 as dual seal devices, allowing the user to waive the use and save the cost of installing external secondary process seals in the conduit as required by the process sealing sections of ANSI/NFPA 70 (NEC) and CSA 22.1 (CEC) These instruments comply with the North-American installation practice and provide a very safe and cost-saving installation for pressurized applications with hazardous fluids.

Further information can be found in the Safety Instructions (XA) of the relevant devices.

Functional safety

Use for level monitoring (MIN, MAX, range) up to SIL 3 (homogeneous or diverse redundancy), independently evaluated by TÜV Rheinland in accordance with IEC 61508, refer to the "Functional Safety Manual" for information.

WHG

WHG approval: Z-65.16-583

Pressure equipment with allowable pressure ≤ 200 bar (2 900 psi)

Pressure instruments with a flange and threaded boss that do not have a pressurized housing do not fall within the scope of the Pressure Equipment Directive, irrespective of the maximum allowable pressure.

Reasons:

According to Article 2, point 5 of EU Directive 2014/68/EU, pressure accessories are defined as "devices with an operational function and having pressure-bearing housings".

If a pressure instrument does not have a pressure-bearing housing (no identifiable pressure chamber of its own), there is no pressure accessory present within the meaning of the Directive.

Radio standard EN 302729

The devices comply with the Level Probing Radar (LPR) radio standard EN 302729. The devices are approved for unrestricted use inside and outside closed containers in countries of the EU and the EFTA . that have already implemented this standard.

The following countries are those that have currently implemented the directive:

Belgium, Bulgaria, Germany, Denmark, Estonia, France, Greece, UK, Ireland, Iceland, Italy, Liechtenstein, Lithuania, Latvia, Malta, The Netherlands, Norway, Austria, Poland, Portugal, Romania, Sweden, Switzerland, Slovakia, Spain, Czech Republic and Cyprus.

Implementation is still underway in all of the countries not listed.

Please note the following for operation of the devices outside of closed vessels:

1. Installation must be carried out by properly trained, expert staff.
2. The device antenna must be installed in a fixed location pointing vertically downwards.
3. The installation site must be located at a distance of 4 km from the astronomy stations listed below or otherwise approval must be provided by the relevant authority. If the device is installed at a distance of 4 to 40 km from one of the listed stations, it must not be installed at a height of more than 15 m (49 ft) above the ground.

Astronomy stations

Country	Name of the station	Latitude	Longitude
Germany	Effelsberg	50°31'32" North	06°53'00" East
Finland	Metsähovi	60°13'04" North	24°23'37" East
	Tuorla	60°24'56" North	24°26'31" East
France	Plateau de Bure	44°38'01" North	05°54'26" East
	Floirac	44°50'10" North	00°31'37" West
Great Britain	Cambridge	52°09'59" North	00°02'20" East
	Damhall	53°09'22" North	02°32'03" West
	Jodrell Bank	53°14'10" North	02°18'26" West
	Knockin	52°47'24" North	02°59'45" West
	Pickmere	53°17'18" North	02°26'38" West
Italy	Medicina	44°31'14" North	11°38'49" East
	Noto	36°52'34" North	14°59'21" East
	Sardinia	39°29'50" North	09°14'40" East
Poland	Fort Skala Krakow	50°03'18" North	19°49'36" East
Russia	Dmitrov	56°26'00" North	37°27'00" East
	Kalyazin	57°13'22" North	37°54'01" East
	Pushchino	54°49'00" North	37°40'00" East
	Zelenchukskaya	43°49'53" North	41°35'32" East
Sweden	Onsala	57°23'45" North	11°55'35" East
Switzerland	Bleien	47°20'26" North	08°06'44" East
Spain	Yebes	40°31'27" North	03°05'22" West
	Robledo	40°25'38" North	04°14'57" West
Hungary	Penc	47°47'22" North	19°16'53" East

As a general rule, the requirements outlined in EN 302729 must be observed.

Radio standard EN 302372

The devices comply with the Tanks Level Probing Radar (TLPR) radio standard EN 302372 and are approved for use in closed containers. For installation, points a to f in Annex E of EN 302372 must be taken into consideration.

FCC

This device complies with Part 15 of the FCC rules. Operation is subject to the following two conditions: (1) This device may not cause harmful interference, and (2) this device must accept any interference received, including interference that may cause undesired operation.

[Any] changes or modifications not expressly approved by the party responsible for compliance could void the user's authority to operate the equipment.

The devices are compliant with the FCC Code of Federal Regulations, CFR 47, Part 15, Sections 15.205, 15.207, 15.209.

In addition, the devices are compliant with Section 15.256 . For these LPR (Level Probe Radar) applications the devices must be professionally installed in a downward operating position. In addition, the devices are not allowed to be mounted in a zone of 4 km around RAS stations and within a radius of 40 km around RAS stations the maxium operation height of devices is 15 m (49 ft) above ground.

Industry Canada

Canada CNR-Gen Section 7.1.3

This device complies with Industry Canada licence-exempt RSS standard(s). Operation is subject to the following two conditions: (1) This device may not interference, and (2) this device must accept any interference, including interference that may cause undesired operation of the device.

Le présent appareil est conforme aux CNR d'Industrie Canada applicables aux appareils radio exempts de licence. L'exploitation est autorisée aux deux conditions suivantes : (1) l'appareil ne doit pas produire de brouillage, et (2) l'utilisateur de l'appareil doit accepter tout brouillage radioélectrique subi, même si le brouillage est susceptible d'en compromettre le fonctionnement.

[Any] changes or modifications not expressly approved by the party responsible for compliance could void the user's authority to operate the equipment.

- The installation of the LPR/TLPR device shall be done by trained installers, in strict compliance with the manufacturer’s instructions.
- The use of this device is on a “no-interference, no-protection” basis. That is, the user shall accept operations of high-powered radar in the same frequency band which may interfere with or damage this device. However, devices found to interfere with primary licensing operations will be required to be removed at the user’s expense.
- This device shall be installed and operated in a completely enclosed container to prevent RF emissions, which can otherwise interfere with aeronautical navigation.
- The installer/user of this device shall ensure that it is at least 10 km from the Dominion Astrophysical Radio Observatory (DRAO) near Penticton, British Columbia. The coordinates of the DRAO are latitude 49°19′15″ N and longitude 119°37′12″ W. For devices not meeting this 10 km separation (e.g., those in the Okanagan Valley, British Columbia,) the installer/user must coordinate with, and obtain the written concurrence of, the Director of the DRAO before the equipment can be installed or operated. The Director of the DRAO may be contacted at 250-497-2300 (tel.) or 250-497-2355 (fax). (Alternatively, the Manager, Regulatory Standards Industry Canada, may be contacted.)

The model FMR60 fulfills the requirements for use as LPR (Level Probe Radar).

Japanese radio approval

The devices comply with Japanese Radio Law, Article 6, Section 1(1)

CRN approval (Canadian pressure equipment directive)

- Selection in the product structure: Feature 590 "Additional Approval", option LD "CRN"
- This option can be selected if the device has a CRN approved process connection according to the following table:

Feature 100 in the product structure	Process connection
GGJ	Thread ISO228 G1-1/2, 316L
RGJ	Thread ANSI MNPT1-1/2, 316L
XJJ	UNI flange 3"/DN80/80, 316L, max 4bar abs / 58 psia, suitable for NPS " Cl.150 / DN80 PN16 / 10K 80

Feature 100 in the product structure	Process connection
XKJ	UNI flange 4"/DN100/100, 316L, max 4bar abs / 58 psia, suitable for NPS 4" Cl.150 / DN100 PN16 / 10K 100
XLJ	UNI flange 6"/DN150/150, 316L, max 4bar abs / 58 psia, suitable for NPS 6" Cl.150 / DN150 PN16 / 10K 150

- For some process connections which are not listed in the product structure a CRN approval is available on request.
- CRN-approved devices bear the registration number CRN 0F19773.5C on the nameplate.

Test, certificate

Feature 580 "Test, certificate"	Description
JA	3.1 Material certificate, wetted metal parts, EN10204-3.1 inspection certificate

Test reports, declarations and inspection certificates are available in electronic format in the *W@M Device Viewer*:
Enter the serial number from nameplate (www.endress.com/deviceviewer)

This concerns the options for the following order codes:
- 550 "Calibration"
- 580 "Test, certificate"

Hard-copy product documentation

Hard-copy versions of the test reports, declarations and inspection certificates can also be order via order code 570 "Service", option I7 "Hard-copy product documentation". The documents are then supplied with the product.

Other standards and guidelines

- EN 60529
  Degrees of protection provided by enclosures (IP code)
- EN 61010-1
  Safety Requirements for Electrical Equipment for Measurement, Control and Laboratory Use
- IEC/EN 61326
  "Emission in accordance with Class A requirements". Electromagnetic compatibility (EMC requirements).
- NAMUR NE 21
  Electromagnetic compatibility (EMC) of industrial process and laboratory control equipment
- NAMUR NE 43
  Standardization of the signal level for the breakdown information of digital transmitters with analog output signal.
- NAMUR NE 53
  Software of field devices and signal-processing devices with digital electronics
- NAMUR NE 107
  Status classification as per NE107
- NAMUR NE 131
  Requirements for field devices for standard applications.
- IEC61508
  Functional safety of safety-related electric/electronic/programmable electronic systems

Ordering information

Ordering information

Detailed ordering information is available for your nearest sales organization www.addresses.endress.com or in the Product Configurator under www.endress.com :

1. Click Corporate
2. Select the country
3. Click Products
4. Select the product using the filters and search field
5. Open the product page

The Configuration button to the right of the product image opens the Product Configurator.

Product Configurator - the tool for individual product configuration
- Up-to-the-minute configuration data
- Depending on the device: Direct input of measuring point-specific information such as measuring range or operating language
- Automatic verification of exclusion criteria
- Automatic creation of the order code and its breakdown in PDF or Excel output format
- Ability to order directly in the Endress+Hauser Online Shop

3-point linearity protocol

The following points must be considered if option **F3** (3-point linearity protocol) was selected in feature 550 ("Calibration").

The 3 points of the linearity protocol are defined as follows:

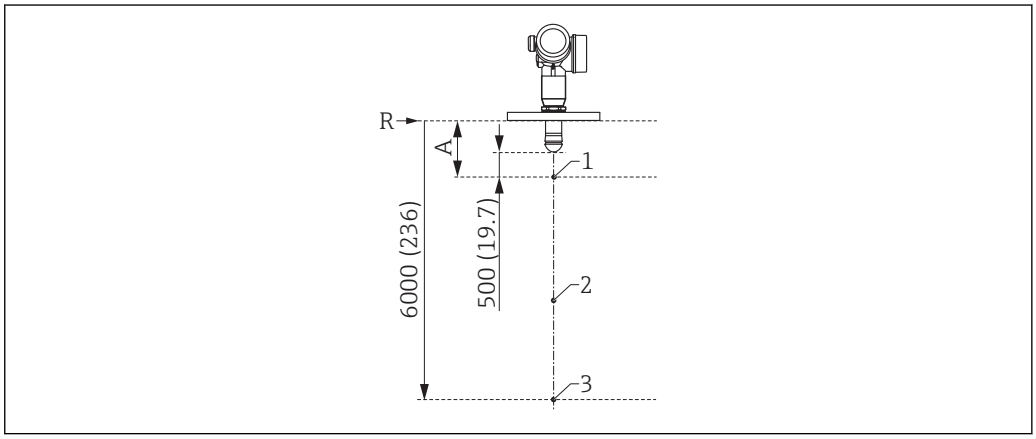

28 Points of the 3-point linearity protocol. Unit of measurement mm (in)

A Distance from the reference point R to the first measuring point
R Reference point of measurement
1 First measuring point
2 Second measuring point (in the middle between the first and third measuring point)
3 Third measuring point

Measuring point	Item
1st measuring point	▪ At a distance A from the reference point ▪ A = length of antenna + 500 mm (19.7 in) ▪ Minimum distance: A_{min} = 1 000 mm (39.4 in)
2nd measuring point	In the middle between the 1st and 3rd measuring point
3rd measuring point	6 000 mm (236 in) below the reference point R

- The position of the measuring points can vary by ±1 cm (±0.04 in).
- The linearity check is performed under reference operating conditions.

5-point linearity protocol

The following points must be considered if option **F4** (5-point linearity protocol) was selected in feature 550 ("Calibration").

The 5 points of the linearity protocol are evenly distributed over the measuring range (0 to 100 %). The Empty calibration (E) and Full calibration (F) must be specified to define the measuring range . If this information is missing, antenna-dependent default values are used instead.

The following restrictions must be considered when selecting E and F:

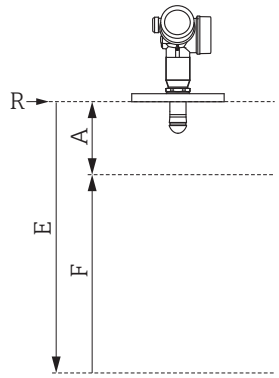

A0032643

R Reference point of measurement
A Minimum distance between reference point R and 100% mark
E Empty calibration
F Full calibration

Minimum distance between reference point R and 100% mark	Minimum span	Maximum value for "Empty calibration"
A ≥ length of antenna + 200 mm (8 in) Minimum value: 400 mm (16 in)	F ≥400 mm (16 in)	E ≤24 m (79 ft)

- The linearity check is performed under reference operating conditions.
- The values selected for Empty calibration and Full calibration are only used to create the linearity protocol. Afterwards, the values are reset to the default values specific for the antenna. If values other than the default values are required, they must be ordered as a customized parameterization.

Customer-specific configuration

Default settings that deviate from the standard can be selected for the following parameters if the option: **IJ** (customized configuration, HART), **IK** (customized configuration, PA) or **IL** (customized configuration, FF) is selected in feature 570 (service):

Parameter	Communication protocol	Picklist / range of values
Setup→Distance unit	▪ HART ▪ PA ▪ FF	▪ in ▪ ft ▪ mm ▪ m
Setup→Empty calibration	▪ HART ▪ PA ▪ FF	Max. 70 m (230 ft)
Setup→Full calibration	▪ HART ▪ PA ▪ FF	Max. <70 m (230 ft)
Setup →Advanced setup → Current output → Damping output	HART	0 to 999.9 s
Setup →Advanced setup → Current output → Failure mode	HART	▪ Min ▪ Max ▪ Last valid value
Expert →Communication → Burst configuration → Burst mode	HART	▪ Off ▪ On

Tagging (TAG)

Ordering feature	895: Marking
Option	Z1: Tagging (TAG), see additional spec.
Position of the measuring point marking	To be selected in the additional specifications: ▪ Tag plate Stainless Steel ▪ Self-adhesive paper label ▪ Supplied label/plate ▪ RFID TAG ▪ RFID TAG + Tag plate Stainless Steel ▪ RFID TAG + Self-adhesive paper label ▪ RFID TAG + Supplied label/plate
Definition of the measuring point designation	To be defined in the additional specifications: 3 lines containing up to 18 characters each The measuring point designation appears on the selected label and/or the RFID TAG.
Designation in the Electronic Name Plate (ENP)	The first 32 characters of the measuring point designation
Designation on the display module	The first 12 characters of the measuring point designation

Services

The following services can be selected via the product structure in the Product Configurator:
- PWIS-free (PWIS = paint-wetting impairment substances)
- Customized parameterization HART
- Customized parameterization PA
- Customized parameterization FF
- Tooling DVD (DeviceCare setup)
- Hard-copy product documentation

Application packages

Heartbeat Diagnostics

Availability

Available in all device versions.

Function

- Continuous self-monitoring of the device.
- Diagnostic messages output to
  - the local display.
  - an asset management system (e.g. FieldCare/DeviceCare).
  - an automation system (e.g. PLC).

Advantages

- Device condition information is available immediately and processed in time.
- The status signals are classified in accordance with VDI/VDE 2650 and NAMUR recommendation NE 107 and contain information about the cause of the error and remedial action.

Detailed description

See the "Diagnostics and troubleshooting" section of the Operating Instructions for the device.

Heartbeat Verification

Availability

Available for the following versions of feature 540 "Application package":
- **EH**
  Heartbeat Verification + Monitoring
- **EJ**
  Heartbeat Verification

Device functionality checked on demand

- Verification of the correct functioning of the measuring device within specifications.
- The verification result provides information about the condition of the device: **Passed** or **Failed**.
- The results are documented in a verification report.
- The automatically generated report supports the obligation to demonstrate compliance with internal and external regulations, laws and standards.
- Verification is possible without interrupting the process.

Advantages

- No onsite presence is required to use the function.
- The DTM triggers verification in the device and interprets the results. No specific knowledge is required on the part of the user.
  (DTM: Device Type Manager; controls device operation via DeviceCare, FieldCare or a DTM-based process control system.)
- The verification report can be used to prove quality measures to a third party.
- **Heartbeat Verification** can replace other maintenance tasks (e.g. periodic check) or extend the test intervals.

SIL/WHG-locked devices

Only relevant for devices with SIL or WHG approval: order code 590 ("Additional approval"), option LA ("SIL") or LC ("WHG").

- The **Heartbeat Verification** module contains a wizard for the proof test which must be performed at appropriate intervals for the following applications:
  - SIL (IEC61508/IEC61511)
  - WHG (German Water Resources Act)
- To perform a proof test, the device must be locked (SIL/WHG locking).
- The wizard can be used via FieldCare, DeviceCare or a DTM-based process control system.

In the case of SIL-locked and WHG-locked devices, it is **not** possible to perform verification without taking additional measures (e.g. bridging the output current) because the output current must be simulated (Increased safety mode) or the level must be approached manually (Expert mode) during subsequent re-locking (SIL/WHG locking).

Detailed description

SD01870F

Heartbeat Monitoring

Availability

Available for the following versions of feature 540 "Application package":
EH
Heartbeat Verification + Monitoring

Function

- In addition to the verification parameters, the corresponding parameter values are also logged.
- Existing measured variables, such as the echo amplitude, are used in the **Foam detection** and **Build-up detection** wizards.

"Foam detection" wizard

- The Heartbeat Monitoring module contains the **Foam detection** wizard.
- This wizard is used to configure automatic foam detection, which detects foam on the product surface on the basis of the reduced signal amplitude. Foam detection can be linked to a switch output in order to control a sprinkler system, for example, which dissolves the foam.
- This wizard can be used via FieldCare, DeviceCare or a DTM-based process control system.

"Build-up detection" wizard

- The Heartbeat Monitoring module contains the **Build-up detection** wizard.
- The wizard is used to configure automatic buildup detection, which detects the buildup of deposits on the antenna on the basis of the increased area of the coupling signal. Buildup detection can be linked to a switch output in order to control a compressed air system, for example, to clean the antenna.
- This wizard can be used via FieldCare, DeviceCare or a DTM-based process control system.

Advantages

- Early detection of changes (trends) to ensure plant availability and product quality.
- Use of information for the proactive planning of measures (e.g. cleaning/maintenance).
- Identification of undesirable process conditions as the basis to optimizing the facility and the processes.
- Automated control of measures to remove foam or buildup.

Detailed description

SD01870F

Accessories

Device-specific accessories **Weather protection cover**

Accessory	Description
Weather protection cover	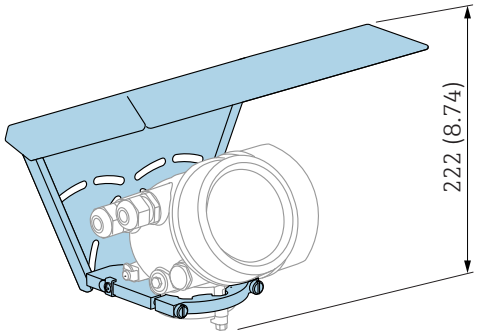 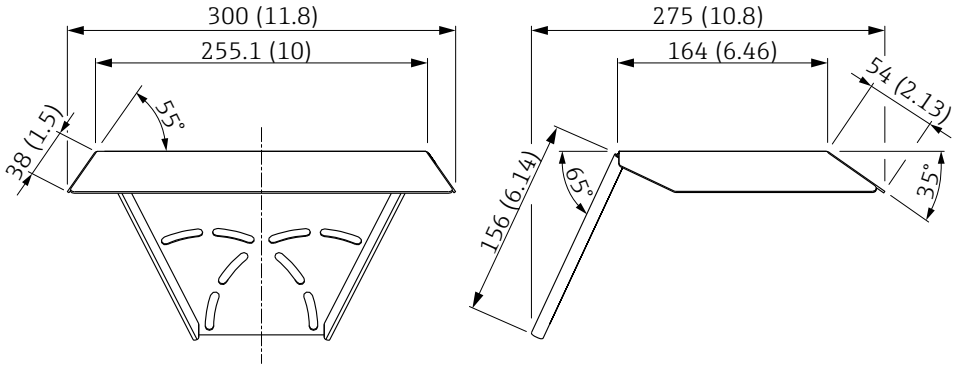 *29 Weather protection cover; Dimensions: mm (in)* The weather protection cover can be ordered together with the device (product structure, feature 620 "Accessory Enclosed", option PB "Weather Protection Cover"). Alternatively, it can be separately ordered as an accessory; order code 71162242.

Mounting bracket, adjustable

Accessories	Description
Mounting bracket, adjustable	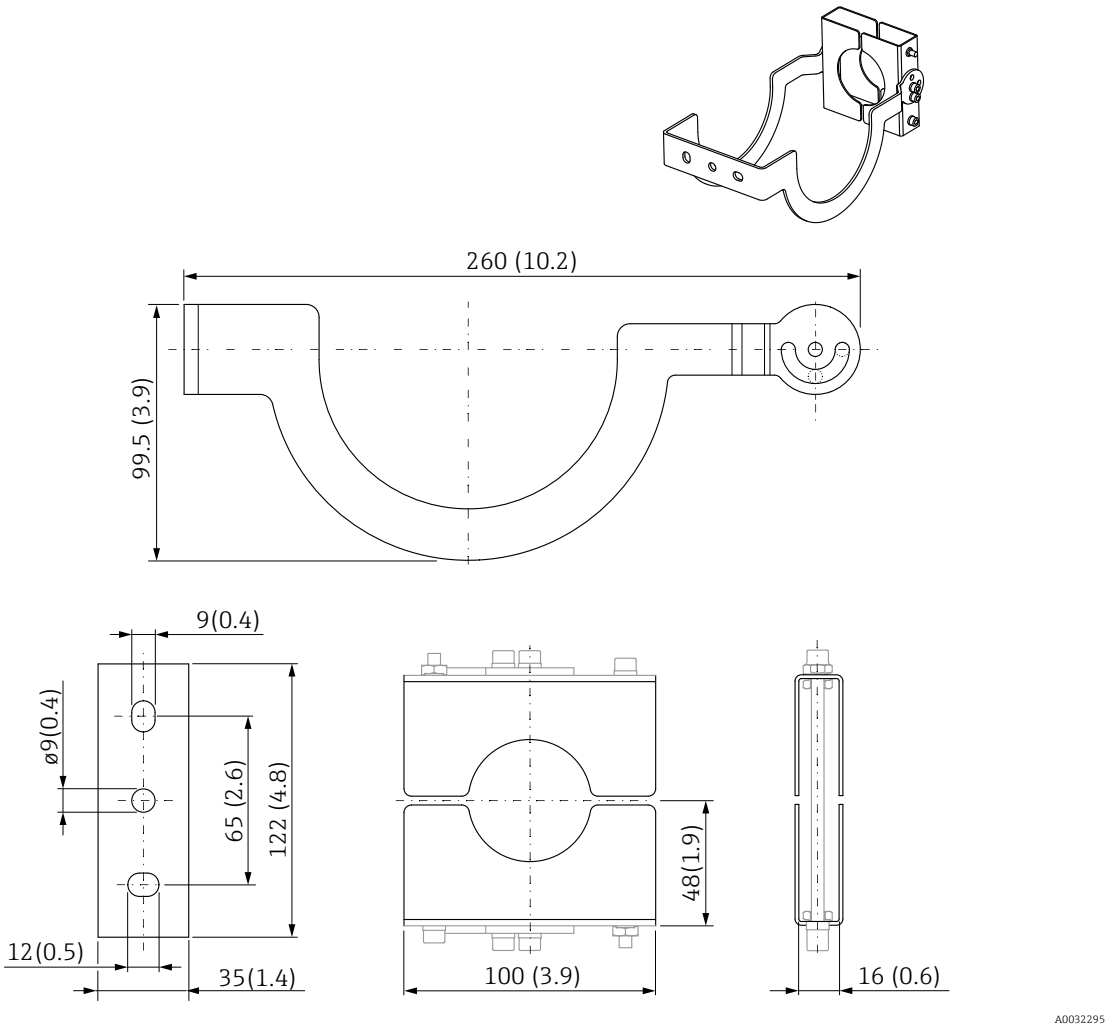 **Material:** 304 (1.4301) **Suitable for housing** [1]: ▪ A: GT19 dual compartment, plastic PBT ▪ C: GT20 dual compartment, aluminum, coated **Suitable for antenna** [2]: GA: Drip-off, PTFE DN50 **Suitable for process connection** [3]: ▪ GGJ: thread ISO228 G1-1/2, 316L ▪ RGJ: thread ANSI MNPT1-1/2, 316L **Order number:** 71336522 ▪ There is **no** conductive connection between the mounting bracket and transmitter housing. ▪ Risk of electrostatic charge. ▪ Integrate the mounting bracket in the local potential equalization system. ▪ Fasten only to stable materials (e.g. metal, brick, concrete) with suitable fastening fixtures (provided by the customer).

1) Feature 040 in the product structure
2) Feature 070 in the product structure
3) Feature 100 in the product structure

Remote display FHX50

Accessories	Description
Remote display FHX50	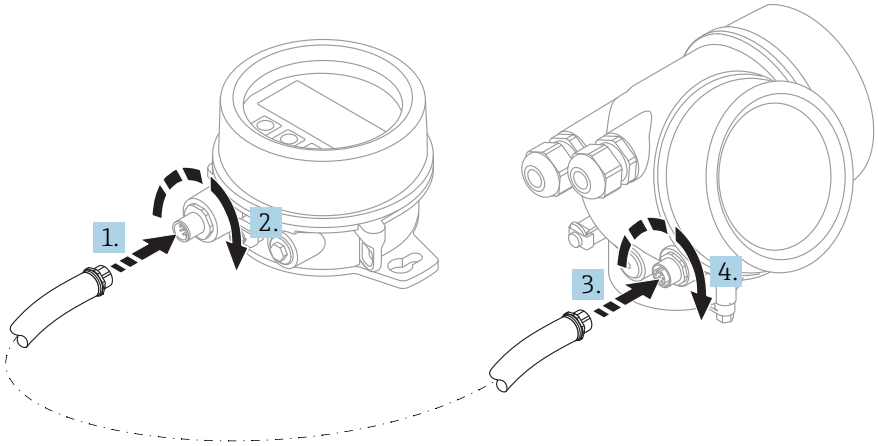 A0019128 ▪ Material: ▪ Plastic PBT ▪ 316L/1.4404 ▪ Aluminum ▪ Degree of protection: IP68 / NEMA 6P and IP66 / NEMA 4x ▪ Suitable for display modules: ▪ SD02 (push buttons) ▪ SD03 (touch control) ▪ Connecting cable: ▪ Cable supplied with device up to 30 m (98 ft) ▪ Standard cable supplied by customer up to 60 m (196 ft) ▪ Ambient temperature range: −40 to 80 °C (−40 to 176 °F) ▪ Ambient temperature range (option): −50 to 80 °C (−58 to 176 °F) [1)] ▪ If the remote display should be used, order the device version "Prepared for display FHX50" (feature 030, version L, M or N). For the FHX50, you must select option A: "Prepared for display FHX50" under feature 050 "Measuring device version". ▪ If the device version "Prepared for display FHX50" was not originally ordered and a FHX50 display is to be retrofitted, you must select version B "Not prepared for display FHX50" under feature 050: "Measuring device version" when ordering the FHX50. In this case, a retrofit kit for the device is supplied with the FHX50. The kit can be used to prepare the device so that the FHX50 can be used. Use of the FHX50 may be restricted for transmitters with an approval. A device can only be retrofitted with the FHX50 if the option L, M or N ("Prepared for FHX50") is listed under *Basic specifications*, item 4 "Display, operation" in the Safety Instructions (XA) for the device. Also pay attention to the Safety Instructions (XA) of the FHX50. Retrofitting is not possible on transmitters with: ▪ An approval for use in areas with flammable dust (dust ignition-proof approval) ▪ Ex nA type of protection For details, see document SD01007F.

1) This range is valid if option JN "Ambient temperature transmitter −50 °C (−58 °F)" has been selected in ordering feature 580 "Test, Certificate". If the temperature is permanently below −40 °C (−40 °F), failure rates may be increased.

Overvoltage protection

Accessories	Description
Overvoltage protection for 2-wire devices OVP10 (1-channel) OVP20 (2-channel)	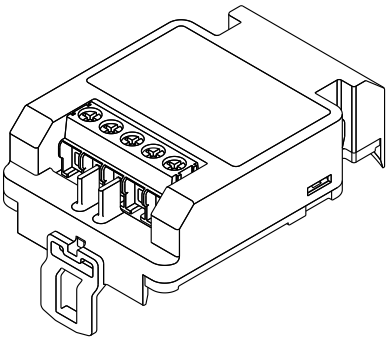 A0021734 **Technical data** ▪ Resistance per channel: 2 × 0.5 Ω_{max} ▪ Threshold DC voltage: 400 to 700 V ▪ Threshold surge voltage: < 800 V ▪ Capacitance at 1 MHz: < 1.5 pF ▪ Nominal leakage current (8/20 µs): 10 kA ▪ Suitable for conductor cross-sections: 0.2 to 2.5 mm^2 (24 to 14 AWG) **Ordered with the device** Ideally, the overvoltage protection module should be ordered directly with the device. See product structure, feature 610 "Accessory mounted", option NA "Overvoltage protection". Separate order necessary only if retrofitting. **Order numbers for retrofitting** ▪ For 1-channel devices (feature 020, option A): OVP10: 71128617 ▪ For 2-channel devices (feature 020, options B, C, E or G) OVP20: 71128619 **Housing cover for retrofitting** In order to keep the necessary safety distances when using the surge arrester module, the housing cover also needs to be replaced when the device is retrofitted. Depending on the housing type, the suitable cover can be ordered using the following material number: ▪ Housing GT18: cover 71185516 ▪ Housing GT19: cover 71185518 ▪ Housing GT20: cover 71185517 **Restrictions in case of retrofitting** The use of the OVP module may be restricted depending on the transmitter approval. A device may only be retrofitted with the OVP module if the option *NA* (overvoltage protection) is listed under *Optional specifications* in the Safety Instructions (XA) associated with the device. For details, see SD01090F.

Gas-tight feedthrough

Chemically inert glass feedthrough; prevents gases from entering the electronics housing

To order with the device: product structure, feature 610 "Accessory mounted", option NC "Gas-tight feedthrough"

Gas-tight feedthrough

Accessories	Description
Gas-tight feedthrough	Chemically inert glass feedthrough; prevents gases from entering the electronics housing To order with the device: product structure, feature 610 "Accessory mounted", option NC "Gas-tight feedthrough"

Bluetooth module for HART devices

Accessory	Description
Bluetooth module	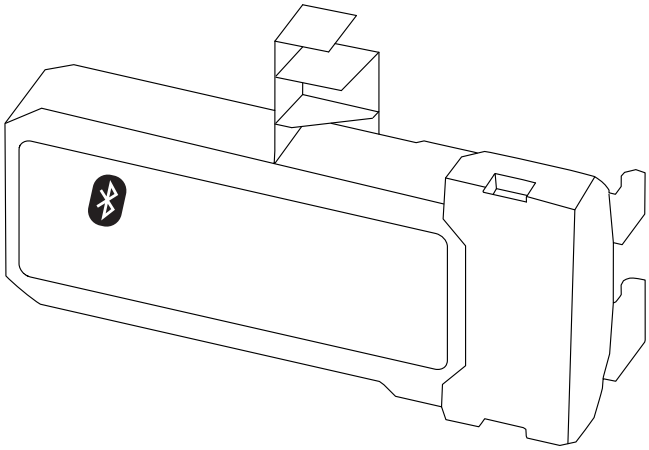 A0036493 ▪ Quick and easy commissioning via SmartBlue (app) ▪ No additional tools or adapters required ▪ Signal curve via SmartBlue (app) ▪ Encrypted single point-to-point data transmission (tested by Fraunhofer institue) and password protected communication via Bluetooth® wireless technology ▪ Range under reference conditions: > 10 m (33 ft) When using the Bluetooth module the minimum supply voltage increases by up to 3 V. **Ordering with device** The Bluetooth module is preferably ordered with the device. See product structure, feature 610 "Accessory Mounted", option NF "Bluetooth". A separate order is only necessary in case of retrofitting. **Order code for retrofitting** Bluetooth module (BT10): 71377355 **Restrictions in case of retrofitting** Depending on the approval of the transmitter, application of the Bluetooth module may be restricted. A device may only be retrofitted with a Bluetooth module if the option *NF* (Bluetooth) is listed in the associated Safety Instructions (XA) under *Optional specifications*. For details refer to SD02252F.

Communication-specific accessories

Commubox FXA195 HART
For intrinsically safe HART communication with FieldCare via the USB interface

For details, see "Technical Information" TI00404F

Commubox FXA291
Connects Endress+Hauser field devices with a CDI interface (= Endress+Hauser Common Data Interface) and the USB port of a computer or laptop
Order number: 51516983

For details, see "Technical Information" TI00405C

HART Loop Converter HMX50
Is used to evaluate and convert dynamic HART process variables to analog current signals or limit values
Order number: 71063562

For details, see "Technical Information" TI00429F and Operating Instructions BA00371F

WirelessHART adapter SWA70
- Is used for the wireless connection of field devices
- The WirelessHART adapter can be easily integrated into field devices and existing infrastructures, offers data protection and transmission safety and can be operated in parallel with other wireless networks

For details, see Operating Instructions BA00061S

Connect Sensor FXA30/FXA30B
Fully integrated, battery-powered gateway for simple applications with SupplyCare Hosting. Up to 4 field devices with 4 to 20 mA communication (FXA30/FXA30B), serial Modbus (FXA30B) or HART (FXA30B) can be connected. With its robust design and ability to run for years on the battery, it is ideal for remote monitoring in isolated locations. Version with LTE (USA, Canada and Mexico only) or 3G mobile transmission for worldwide communication.

For details, see "Technical Information" TI01356S and Operating Instructions BA01710S.

Fieldgate FXA42
Fieldgates enable communication between connected 4 to 20 mA, Modbus RS485 and Modbus TCP devices and SupplyCare Hosting or SupplyCare Enterprise. The signals are transmitted either via Ethernet TCP/IP, WLAN or mobile communications (UMTS). Advanced automation capabilities are available, such as an integrated Web-PLC, OpenVPN and other functions.

For details, see "Technical Information" TI01297S and Operating Instructions BA01778S.

SupplyCare Enterprise SCE30B
Inventory management software that displays the level, volume, mass, temperature, pressure, density or other parameters of tanks. The parameters are recorded and transmitted by means of gateways like Fieldgate FXA42, Connect Sensor FXA30B or other gateway types.
This Web-based software is installed on a local server and can also be visualized and operated with mobile terminals such as a smartphone or tablet.

For details, see Technical Information TI01228S and Operating Instructions BA00055S

SupplyCare Hosting SCH30
Inventory management software that displays the level, volume, mass, temperature, pressure, density or other parameters of tanks. The parameters are recorded and transmitted by means of gateways like Fieldgate FXA42, Connect Sensor FXA30B or other gateway types.
SupplyCare Hosting is offered as a hosting service (Software as a Service, SaaS). In the Endress +Hauser portal, the user is provided with the data over the Internet.

For details, see Technical Information TI01229S and Operating Instructions BA00050S

Field Xpert SFX350
Field Xpert SFX350 is a mobile computer for commissioning and maintenance. It enables efficient device configuration and diagnostics for HART and FOUNDATION Fieldbus devices in the **non-Ex area**.

For details, see Operating Instructions BA01202S

Field Xpert SFX370
Field Xpert SFX370 is a mobile computer for commissioning and maintenance. It enables efficient device configuration and diagnostics for HART and FOUNDATION Fieldbus devices in the **non-Ex area** and the **Ex area**.

For details, see Operating Instructions BA01202S

Service-specific accessories

DeviceCare SFE100
Configuration tool for HART, PROFIBUS and FOUNDATION Fieldbus field devices

Technical Information TI01134S

FieldCare SFE500
FDT-based plant asset management tool
It can configure all smart field units in your system and helps you manage them. By using the status information, it is also a simple but effective way of checking their status and condition.

Technical Information TI00028S

System components

Memograph M graphic data manager
The Memograph M graphic data manager provides information on all the relevant process variables. Measured values are recorded correctly, limit values are monitored and measuring points analyzed. The data are stored in the 256 MB internal memory and also on a SD card or USB stick.

Technical Information TI00133R and Operating Instructions BA00247R

RN221N
Active barrier with power supply for safe separation of 4 to 20 mA standard signal circuits. Offers bidirectional HART transmission.

Technical Information TI00073R and Operating Instructions BA00202R

RN221
Supply unit for powering two 2-wire measuring devices solely in the non-Ex area. Bidirectional communication is possible via the HART communication jacks.

Technical Information TI00081R and Brief Operating Instructions KA00110R

Supplementary documentation

The following documentation types are available in the Downloads section of the Endress+Hauser website (www.endress.com/downloads):

For an overview of the scope of the associated Technical Documentation, refer to the following:
- *W@M Device Viewer* (www.endress.com/deviceviewer): Enter the serial number from nameplate
- *Endress+Hauser Operations App*: Enter the serial number from the nameplate or scan the 2D matrix code (QR code) on the nameplate

Brief Operating Instructions (KA)

Guide that takes you quickly to the 1st measured value
The Brief Operating Instructions contain all the essential information from incoming acceptance to initial commissioning.

Operating Instructions (BA)

Your reference guide
These Operating Instructions contain all the information that is required in various phases of the life cycle of the device: from product identification, incoming acceptance and storage, to mounting, connection, operation and commissioning through to troubleshooting, maintenance and disposal.

Safety Instructions (XA)

Depending on the approval, the following Safety Instructions (XA) are supplied with the device. They are an integral part of the Operating Instructions.

The nameplate indicates the Safety Instructions (XA) that are relevant to the device.

71496290

www.addresses.endress.com

Endress+Hauser

People for Process Automation